THE CHARCOAL OVENS COMPANY

2023

CHARCOAL OVENS AND BARBECUES CATALOGUE

05/2022 v1

TIRA
THE CHARCOAL OVENS COMPANY

CHARCOAL OVENS

08 PIRA-70 SILVER
10 PIRA-70XL SILVER
12 PIRA-80 SILVER
14 PIRA-90 SILVER
16 PIRA-90D SILVER
18 PIRA-120 SILVER
20 PIRA-120D SILVER

22 PIRA-70 LUX
24 PIRA-70XL LUX
26 PIRA-80 LUX
28 PIRA-90 LUX
30 PIRA-90D LUX
32 PIRA-120 LUX
34 PIRA-120D LUX

36 PIRA BLACK LINE
38 CHIMNEY KIT

BARBECUES

42 BBQ-M80
44 BBQ-M120
46 BBQ-M150
48 BBQ-COMBI-LUX

50 ESP-80
52 ESP-160

BRAZIER

54 BRA-80

ACCESSORIES

56 ALUMINIUM COOKWARE
58 RUSTIC COOKWARE
60 INOX CAGES
62 FISH GRILL CLAMP

PRO SERIES FOR HOME

64 PIRA 50 (BLACK / LUX / SILVER)
66 BBQ JOBA

Pira Charcoal Ovens manufactures professional charcoal ovens and barbecues, capable of satisfying the needs of the most demanding user, with the highest quality and at the best market price.

This could be one more marketing phrase, "but it is not"... since we began marketing the most advanced line of ovens in April 2014 under our brand, more than 10,000 ovens and PIRA barbecues expand the culture of #piraflavour with the satisfaction of our customers all over the world.

With the Pira charcoal ovens you can bake and cook all kinds of food and thus give your dishes the unique flavor of barbecue, all without leaving the comfort of your kitchen.

A charcoal oven is the perfect combination between a barbecue and an oven, merging into a simple machine, the best of both options.

Our ovens and barbecues work with charcoal, but small pieces of wood and/or firewood can be added. They do not need any electrical or gas connection.

With a Pira charcoal oven, you will save up to 40% on charcoal compared to traditional grills. At the same time, you will save a lot of time, since the temperature that you will obtain in the cooking chamber will allow you to cook up to 35% faster than in an open barbecue.

#PiraOvens allows you to offer the most authentic grilled taste in all kinds of dishes, achieving unsurpassed flavors, juices and textures.

CHARACTERISTICS WE MAKE A DIFFERENCE

At **#PiraCharcoalOvens** everything is a matter of details ... and details make the difference ... in product and service.

- **Quality ovens at reasonable prices.**

- **Do you need a chef?** We send you a chef wherever you are. Nothing can fail you.

- **Piracold:** Insulation system that drastically reduces the outside temperature and reduces coal consumption. We save coal, energy and money.

- **Integrated collector** for oils and fats, giving the option of cooking with grooved grills.

- The **grooved grills** allow you to cook delicate foods (fish, vegetables) or greasy foods (chicken, duck, etc.) without fear of flames, avoiding bad odors, excess smoke, and the presentation of burned foods.

- **The broadest catalog of grills on the market** to meet any chef's need: options for rod grills, grooved grills, for skewers, chicken skewers, griddle plates, etc.

- Model 80 and above, thanks to the **"half grills"** we offer the possibility of cooking with different types of grills at the same time and at the same height.

- **Multiple cooking guides and levels**. More production capacity.

- **Air regulator and internal firewall incorporated as standard in all models.** The external option also exists.

- **Panoramic glass door:** The chef can see the cooking chamber any time, and also the “sense of the show” ... every day more and more kitchens are “open kitchens” and the diners can see the smoke and the fire. If you want a blind door, it is also available with the #PiraSdSeries.

- With PiraEdSeries, ovens with **lifting glass door, we reduce the space between the chef and the oven,** we do not dirty the glass by not getting drops or grease on the glass, and we also avoid any possibility of breaking the glass, because the chef cannot use the door as a plate support.

- We offer all **foundry and mud cookware** special for charcoal ovens, capable of withstand the high temperatures without fear of breakage or deformation.

- We offer the best **coals of the highest quality and durability** for ensure a full service filled with aromas.

- Endless quality details, such as the **exclusively designed hopper grill**, which with good maintenance could become an element for life.

- **Constant innovation** and possibility of manufacturing special orders according to customer needs.

In this catalog you will find our basic presentation of products, but it is only the beginning, you will have doubts, questions, concerns ... **Contact us! we are at your service.**

TORA
THE CHARCOAL OVENS COMPANY

THE BEST OVENS.
FOR THE BEST CHEFS.

PIRA
70 SILVER

85 covers

- Made of cast iron
- Piracold® regrigeration system
- 7 guides
- Front ash drawer
- Built-in firebreak inside the oven
- Analog temperature display
- Exhaust switch to control air flow
- Built-in grease collector

Chef Benito Gomez (2 Michelin Star)

PIRA 70 SILVER SD	
REF.	450.106

PIRA 70 SILVER ED	
REF.	450.107

TECHNICAL INFORMATION			
Average production	60 Kg/h	Capacity in GN trays	1xGN 1/1
Maximum charcoal capacity	3 Kg	Smoke Outlet	180mm
Maximum charcoal consumption	4 Kg per service	Net weight SD	155 Kg
Fire up time	30 min.	Net weight ED	187 Kg
Cooking temperature	180ºC to 350ºC	Power equivalence	3.0 KW

DIMENSIONS PIRA 70 SILVER SD

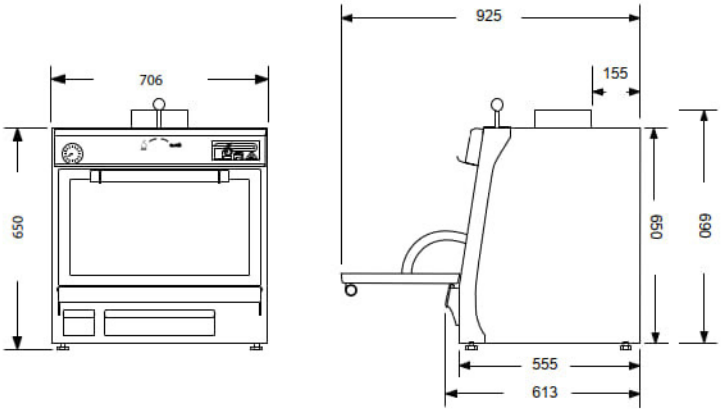

DIMENSIONS PIRA 70 SILVER

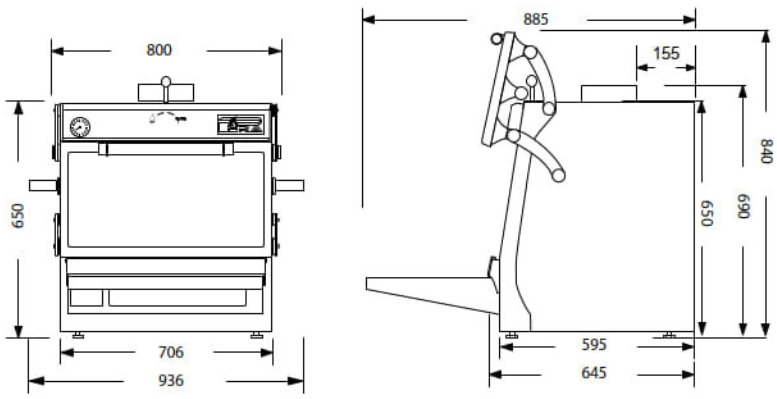

INCLUDED ACCESSORIES

REF.	DESCRIPTION
950.004	Meat Tongs TOP 400 mm
950.001	Poker
900.045	Rod Grill 70 LUX (585x465)
902.945	Front Inox Table 29 cm 70 ED

ROD GRILL

MEAT TONGS TOP 400 MM

POKER

FRONT INOX TABLE 29 CM

Bardal restaurant in Ronda (Malaga) by chef Benito Gomez (2 Michelin stars)

ACCESORIOS

REF.	DESCRIPTION
750.001	Coupler Ring
750.002	External Airflow Regulator
750.003	External Firebreak
750.004	Inox Hat
750.005	Adapter

*Mandatory External firebreak. Info pag 42/43

901.045	Grooved Grill 70 (515x470)
960.045	Griddle Plate 70 (525x470)
965.070	Skewers Support 70 (capacity 8 u.)
961.070	Pizza Baking Sheet 70 (570x430)
955.070	Skewers 70
950.005	Meat Tongs 330 mm
920.045	Warming Tray 70
924.045	Warming Tray 70 ED
904.045	Front Inox Table 40 cm 70 ED
770.245	Coal Bunker Table Pira 70
770.345	Coal Bunker Table Pira 70 SILVER

GROOVED GRILL

GRIDDLE PLATE

SKEWERS SUPPORT

WARMING TRAY

COAL BUNKER TABLE PIRA 70 LUX

COAL BUNKER TABLE PIRA 70 SILVER

PIZZA SHEET 70

MEAT TONGS 330 MM

PIRA
70 XL SILVER

100 covers

- Made of cast iron
- Piracold® regrigeration system
- 7 guides
- Front ash drawer
- Built-in firebreak inside the oven
- Analog temperature display
- Exhaust switch to control air flow
- Built-in grease collector

PIRA 70 XL SILVER SD	
REF.	480.106

PIRA 70 XL SILVER ED	
REF.	480.107

TECHNICAL INFORMATION			
Average production	65 Kg/h	Capacity in GN trays	1xGN 1/1 + 1xGN 2/4 1xGN 1/1 + 1xGN 1/3 + 1xGN 1/6
Maximum charcoal capacity	4 Kg	Smoke Outlet	180mm
Maximum charcoal consumption	5 Kg per service	Net weight SD	167 kg
Fire up time	30 min.	Net weight ED	200 Kg
Cooking temperature	180ºC to 350ºC	Potencia Equivalente	3.5 KW

DIMENSIONS PIRA 70 XL SILVER SD

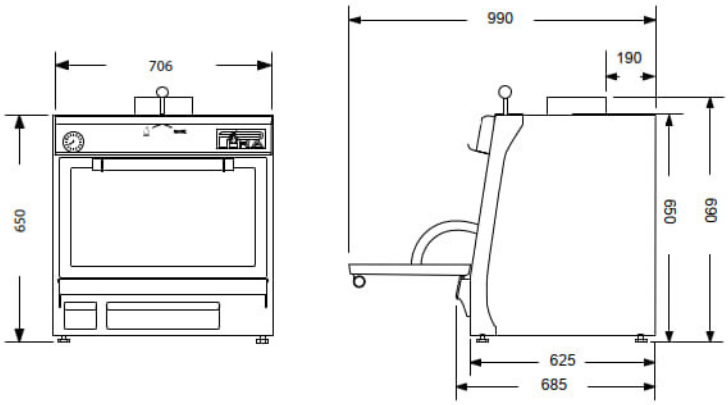

DIMENSIONS PIRA 70 XL SILVER ED

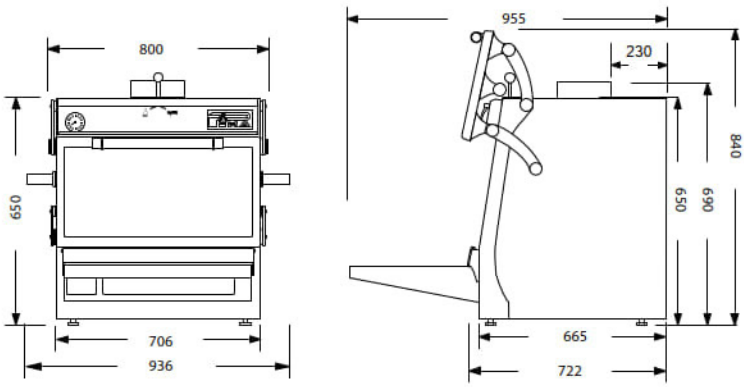

INCLUDED ACCESSORIES

REF.	DESCRIPTION
950.004	Meat Tongs TOP 400 mm
950.001	Poker
900.048	Rod Grill 70 XL LUX (585x535)
902.945	Front Inox Table 29 cm 70/70xl ED

ROD GRILL

MEAT TONGS TOP 400 MM

POKER

FRONT INOX TABLE 29 CM 70/70xl ED

PIRA assessor chef in the company's training classroom.

ACCESSORIES

REF.	DESCRIPTION
750.001	Coupler Ring
750.002	External Airflow Regulator
750.003	External Firebreak*
750.004	Inox Hat
750.005	Adapter

*Mandatory External firebreak. Info pag 42/43

901.048	Grooved Grill 70 XL (515x540)
960.048	Griddle Plate 70 XL (525x540)
965.077	Skewers Support 70 XL (capacity 8 u.)
961.048	Pizza Baking Sheet 70 XL (570x500)
955.080	Skewers 70xl/80
950.005	Meat Tongs 330 mm
920.048	Warming Tray 70 XL
924.048	Warming Tray 70 XL ED
904.045	Front Inox Table 40 cm 70 XL ED
770.248	Coal Bunker Table Pira 70 XL
770.348	Coal Bunker Table Pira 70 XL SILVER

GROOVED GRILL

GRIDDLE PLATE

SKEWERS SUPPORT

WARMING TRAY

COAL BUNKER TABLE PIRA 70 LUX

COAL BUNKER TABLE PIRA 70 SILVER

PIZZA SHEET 70 XL

MEAT TONGS 330 MM

PIRA
80 SILVER

115 covers

- Made of cast iron
- Piracold® regrigeration system
- 7 guides
- Front ash drawer
- Built-in firebreak inside the oven
- Analog temperature display
- Exhaust switch to control air flow
- Built-in grease collector

PIRA 80 SILVER SD	
REF.	490.106

PIRA 80 SILVER ED	
REF.	490.107

TECHNICAL INFORMATION			
Average production	75 Kg/h	Capacity in GN trays	2xGN 1/1 [Different height] 1x GN 1/1 + 1xGN 2/4
Maximum charcoal capacity	4.5 Kg	Smoke Outlet	180mm
Maximum charcoal consumption	5.5 Kg per service	Net weight SD	186 Kg
Fire up time	30 min.	Net weight ED	221 Kg
Cooking temperature	180ºC to 350ºC	Power equivalence	4.5 KW

DIMENSIONS PIRA 80 SILVER SD

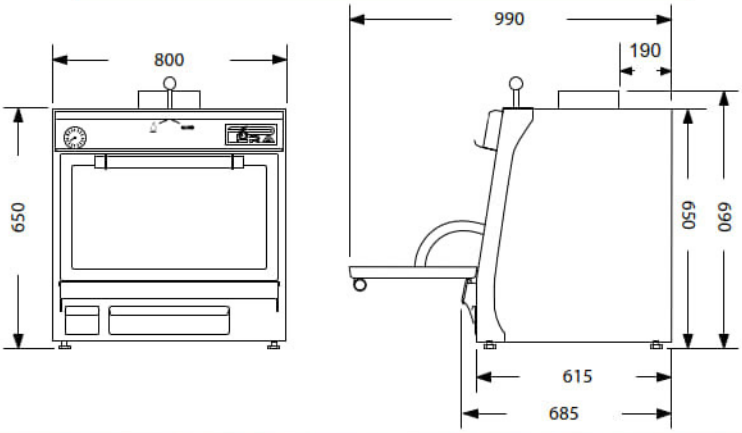

DIMENSIONS PIRA 80 SILVER ED

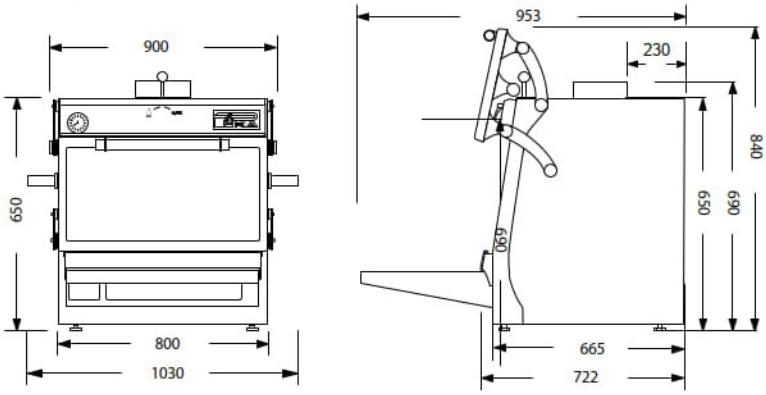

INCLUDED ACCESSORIES

REF.	DESCRIPTION
950.004	Meat Tongs TOP 400 mm
950.001	Poker
900.049	Rod Grill 80 (685x535)
902.949	Front Inox Table 29 cm 80 ED

ROD GRILL

MEAT TONGS TOP 400 MM

POKER

FRONT INOX TABLE 29 CM

Detail #Pira80SilverEd at Starlite Festival 2021 in Marbella

ACCESSORIES

REF.	DESCRIPTION
750.001	Coupler Ring
750.002	External Airflow Regulator
750.003	External Firebreak*
750.004	Inox Hat
750.005	Adapter
	*Mandatory External firebreak. Info pag 42/43
901.049	Grooved Grill 80 (615x540)
960.049	Griddle Plate 80 (625x545)
965.080	Skewers Support 80 (capacity 9 u.)
961.080	Pizza Baking Sheet 80 (660x500)
970.049	Split 80 4 guias
970.249	Split 80 7 guias
900.492	1/2 Rod Grill 80 (330x545)
901.492	1/2 Grooved Grill 80 (230x540)
960.492	1/2 Griddle Plate 80 (230x545)
955.080	Skewers 70xl/80
950.005	Meat Tongs 330 mm
920.049	Warming Tray 80
924.049	Warming Tray 80 ED
904.049	Front Inox Table 40 cm 80 ED
770.249	Coal Bunker Table Pira 80
770.349	Coal Bunker Table Pira 80 SILVER

GROOVED GRILL

GRIDDLE PLATE

SKEWERS SUPPORT

WARMING TRAY

MEAT TONGS 330 MM

SPLIT 80 (4 GUIAS)

COAL BUNKER TABLE PIRA 80 LUX

COAL BUNKER TABLE PIRA 80 SILVER

PIRA
90 SILVER

130 covers

- Made of cast iron
- Piracold® regrigeration system
- 8 guides
- Front ash drawer
- Built-in firebreak inside the oven
- Analog temperature display
- Exhaust switch to control air flow
- Built-in grease collector

PIRA 90 SILVER SD	
REF.	500.106

PIRA 90 SILVER ED	
REF.	500.107

TECHNICAL INFORMATION			
Average production	110 Kg/h	Capacity in GN trays	2xGN 1/1
Maximum charcoal capacity	5 Kg	Smoke Outlet	180mm
Maximum charcoal consumption	6 Kg per service	Net weight SD	275 Kg
Fire up time	30 min.	Net weight ED	303 Kg

DIMENSIONS PIRA 90 SILVER SD

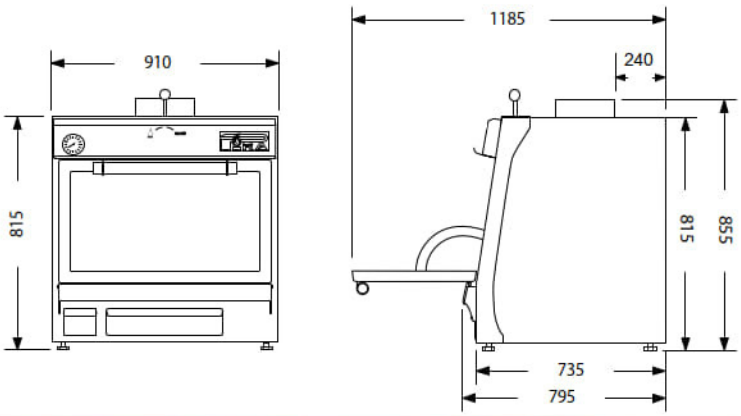

DIMENSIONS PIRA 90 SILVER

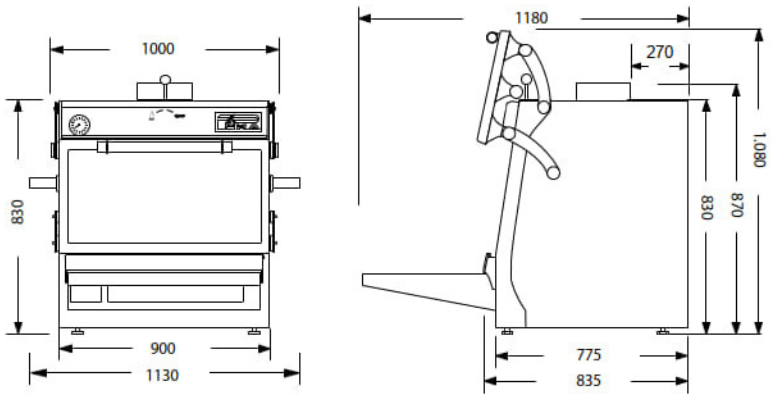

INCLUDED ACCESSORIES

REF.	DESCRIPTION
950.004	Meat Tongs TOP 400 mm
950.001	Poker
900.050	Rod Grill 90 (780x625)
904.050	Front Inox Table 40 cm P90 ED

ROD GRILL

MEAT TONGS TOP 400 MM

POKER

FRONT INOX TABLE 40 CM

Kitchen detail Restaurant Foier des Guides in Valtournenche (Italian Alps)

ACCESSORIES

REF.	DESCRIPTION
750.001	Coupler Ring
750.002	External Airflow Regulator
750.003	External Firebreak*
750.004	Inox Hat
750.005	Adapter
	*Mandatory External firebreak. Info pag 42/43
901.050	Grooved Grill 90 (780x625)
960.050	Griddle Plate 90 (700x585)
965.090	Skewers Support 90 (capacity 11 u.)
965.020	Chicken Skewers Support 90 (capacity 4 u.)
961.090	1/2 Pizza Baking Sheet 90 (370x590)
970.050	Split 90 4 guias
970.052	Split 90 7 guias
900.052	1/2 Rod Grill 90 (385x625)
901.052	1/2 Grooved Grill 90 (300x585)
960.052	1/2 Griddle Plate 90 (325x587)
965.092	1/2 Skewers Support 90 (capacity 4u.)
955.090	Skewers 90/120
955.120	Chicken Skewers 90/120
950.005	Meat Tongs 330 mm
920.050	Warming Tray 90
924.050	Warming Tray 90 ED
902.950	Front Inox Table 29 cm 90 ED
770.250	Coal Bunker Table Pira 90
770.350	Coal Bunker Table Pira 90 SILVER

GROOVED GRILL

GRIDDLE PLATE

SKEWERS SUPPORT

CHICKEN SKEWERS SUPPORT

WARMING TRAY

SPLIT 90 (4 GUIAS)

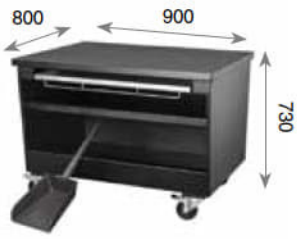

COAL BUNKER TABLE PIRA 90 LUX

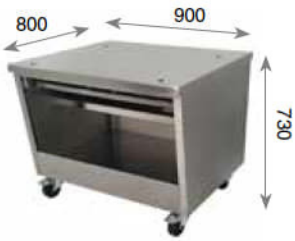

COAL BUNKER TABLE PIRA 90 SILVER

MEAT TONGS 330 MM

PIRA

90D SILVER SD/ED

180 covers

- Made of cast iron
- Piracold® regrigeration system
- 8 guides upper chamber
- 7 guides lower chamber
- Front ash drawer
- Built-in firebreak inside the oven
- Analog temperature display
- Exhaust switch to control air flow
- Built-in grease collector

PIRA 90D SILVER SD/ED	
REF.	170.105

TECHNICAL INFORMATION	
Average production	145 Kg/h
Max charcoal capacity	5 Kg
Max charcoal comsumption	6 Kg per service
Fire up time	30 min.
Capacity in GN trays	2xGN 1/1
Smoke Outlet	180 mm
Net Weight	486 Kg
Cooking temperature	180ºC to 350ºC
Power equivalence	6.0 KW

DIMENSIONS PIRA 90D SILVER SD/ED

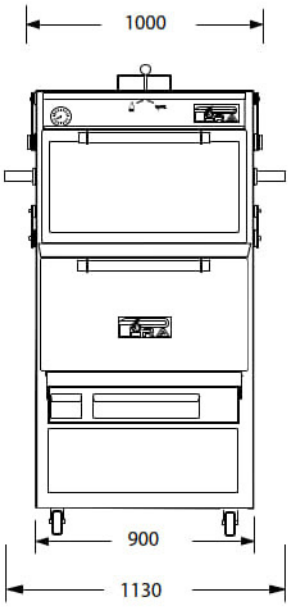

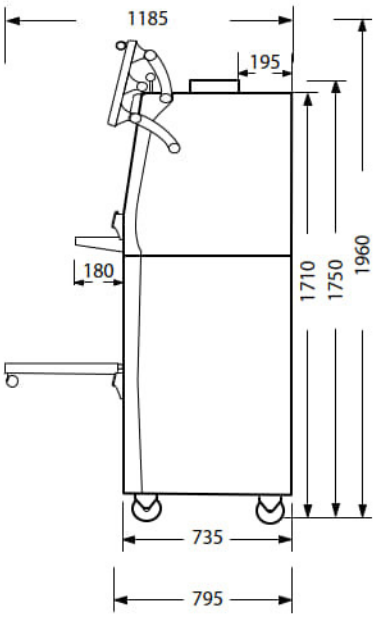

INCLUDED ACCESSORIES

REF.	DESCRIPTION
950.004	Meat Tongs TOP 400 mm
950.001	Poker
900.050	Rod Grill 90 (780x625)
904.150	Front Inox Table 18 cm P90 ED

ROD GRILL

MEAT TONGS TOP 400 MM

POKER

FRONT INOX TABLE 40 CM

Ara Bracis Restaurant kitchen detail in Rome

ACCESSORIES

REF.	DESCRIPTION
759.007	External Firebreak* 90D
759.008	Inox Hat 90D
	*Mandatory External firebreak. Info pag 42/43
901.050	Grooved Grill 90 (780x625)
960.050	Griddle Plate 90 (700x585)
965.090	Skewers Support 90 (capacity 11 u.)
965.020	Chicken Skewers Support 90 (capacity 4 u.)
961.090	1/2 Pizza Baking Sheet 90 (370x590)
970.050	Split 90 4 guias
970.052	Split 90 7 guias
900.052	1/2 Rod Grill 90 (385x625)
901.052	1/2 Grooved Grill 90 (300x585)
960.052	1/2 Griddle Plate 90 (325x587)
965.092	1/2 Skewers Support 90 (capacity 4u.)
955.090	Skewers 90/120
955.120	Chicken Skewers 90/120
950.005	Meat Tongs 330 mm
924.050	Warming Tray 90 ED

GROOVED GRILL

GRIDDLE PLATE

SKEWERS SUPPORT

CHICKEN SKEWERS SUPPORT

WARMING TRAY

SPLIT 90 (4 GUIAS)

1/2 ROD GRILL 90

1/2 GROOVED GRILL 90

1/2 PIZZA SHEETS

MEAT TONGS 330 MM

PIRA
120 SILVER

175 covers

- Made of cast iron
- Piracold® regrigeration system
- 7 guides
- Front ash drawer
- Built-in firebreak inside the oven
- Analog temperature display
- Exhaust switch to control air flow
- Built-in grease collector

Chef Andrea Ramezzana, Italian assessor chef at Host Milano 2019

PIRA 120 SILVER SD	
REF.	120.106

PIRA 120 SILVER ED	
REF.	120.107

TECHNICAL INFORMATION			
Average production	150 Kg/h	Capacity in GN trays	3xGN 1/1
Maximum charcoal capacity	6 Kg	Smoke Outlet	210mm
Maximum charcoal consumption	7 Kg per service	Net weight SD	360 Kg
Fire up time	30 min.	Net weight ED	391 Kg
Cooking temperature	180ºC to 350ºC	Power equivalence	8.0 KW

DIMENSIONS PIRA 120 SILVER SD

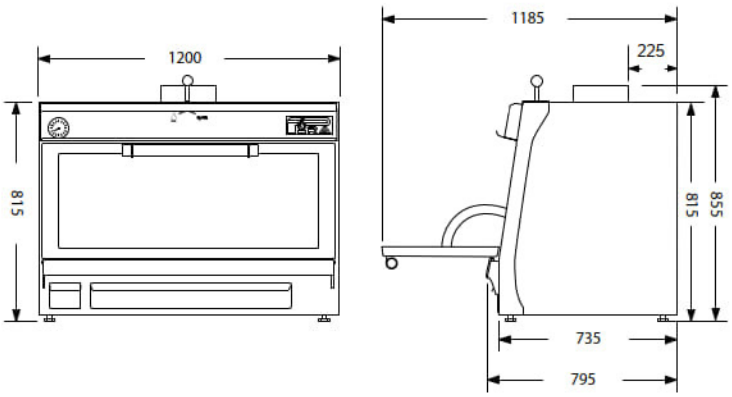

DIMENSIONS PIRA 120 SILVER ED

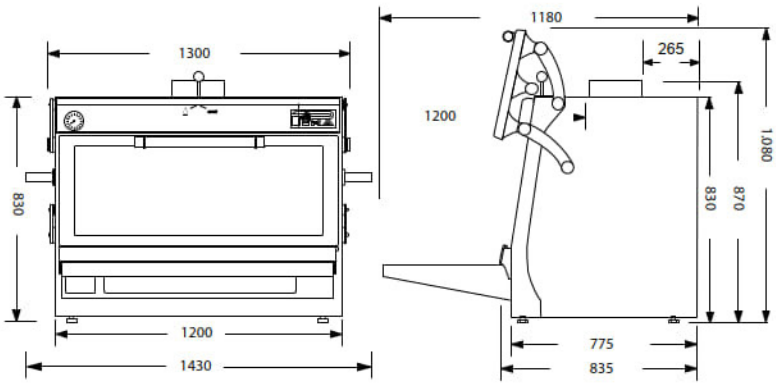

INCLUDED ACCESSORIES

REF.	DESCRIPTION
950.004	Meat Tongs TOP 400 mm
950.008	Poker
900.120	Rod Grill 120 (1060x625)
904.012	Front Inox Table 40 cm 120 ED

ROD GRILL

MEAT TONGS TOP 400 MM

POKER

FRONT INOX TABLE 40 CM

ACCESSORIES

REF.	DESCRIPTION
750.007	External Firebreak* 120
750.008	Inox Hat 120
	*Mandatory External firebreak. Info pag 42/43
901.120	Grooved Grill 120 (990x585)
965.120	Skewers Support 120 (capacity 15 u.)
965.021	Chicken Skewers Support 120 (capacity 5 u.)
961.120	1/2 Pizza Baking Sheet 120 (520x590)
970.120	Split 120 4 guias
970.122	Split 120 5 guias
900.122	1/2 Rod Grill 120 (535x625)
901.122	1/2 Grooved Grill 120 (460x585)
960.122	1/2 Griddle Plate 120 (458x590)
965.122	1/2 Skewers Support 120 (capacity 6u.)
955.090	Skewers 90/120
955.120	Chicken Skewers 90/120
950.005	Meat Tongs 330 mm
920.120	Warming Tray 120
924.120	Warming Tray 120 ED
902.912	Front Inox Table 29 cm 120 ED
770.220	Coal Bunker Table Pira 120
770.320	Coal Bunker Table Pira 120 SILVER

GROOVED GRILL

GRIDDLE PLATE

SKEWERS SUPPORT

CHICKEN SKEWERS SUPPORT

WARMING TRAY

SPLIT 120 (4 GUIAS)

COAL BUNKER TABLE PIRA 120 LUX

COAL BUNKER TABLE PIRA 120 SILVER

1/2 PIZZA SHEET 120

MEAT TONGS 330 MM

PIRA
120D SILVER SD/ED

CE PG

250 covers

- Made of cast iron
- Piracold® regrigeration system
- 6 guides upper chamber
- 6 guides lower chamber
- Front ash drawer
- Built-in firebreak inside the oven
- Analog temperature display
- Exhaust switch to control air flow
- Built-in grease collector

PIRA 120D SILVER SD/ED	
REF.	120.109

TECHNICAL INFORMATION	
Average production	200 Kg/h
Max charcoal capacity	7 Kg
Max charcoal comsumption	7 Kg per service
Fire up time	30 min.
Capacity in GN trays	2xGN 1/1
Smoke Outlet	210 mm
Net Weight	730 Kg
Cooking temperature	180ºC to 350ºC
Power equivalence	8.0 KW

DIMENSIONS PIRA 120D SILVER SD/ED

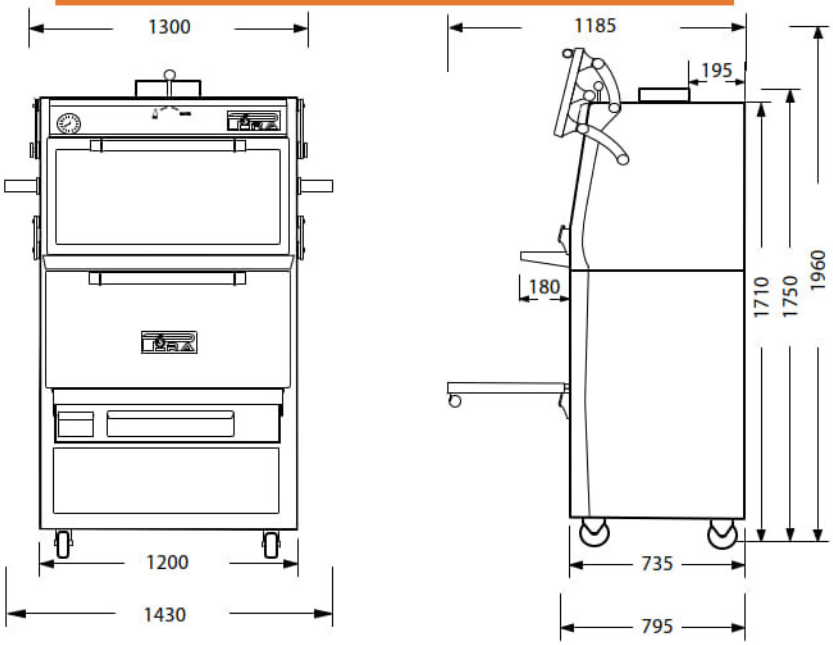

INCLUDED ACCESSORIES

REF.	DESCRIPTION
950.004	Meat Tongs TOP 400 mm
950.008	Poker
900.120	Rod Grill 120 (1060x625)

ROD GRILL

MEAT TONGS TOP 400 MM

POKER

FRONT INOX TABLE 40 CM

ACCESSORIES

REF.	DESCRIPTION
750.007	External Firebreak* 120
750.008	Inox Hat 120
	*Mandatory External firebreak. Info pag 42/43
901.120	Grooved Grill 120 (990x585)
965.120	Skewers Support 120 (capacity 15 u.)
965.021	Chicken Skewers Support 120 (capacity 5 u.)
961.120	1/2 Pizza Baking Sheet 120 (520x590)
970.120	Split 120 4 guias
970.122	Split 120 5 guias
900.122	1/2 Rod Grill 120 (535x625)
901.122	1/2 Grooved Grill 120 (460x585)
960.122	1/2 Griddle Plate 120 (458x590)
965.122	1/2 Skewers Support 120 (capacity 6u.)
955.090	Skewers 90/120
955.120	Chicken Skewers 90/120
950.005	Meat Tongs 330 mm
924.120	Warming Tray 120 ED

GROOVED GRILL

GRIDDLE PLATE

CHICKEN SKEWERS SUPPORT

SKEWERS SUPPORT

CHICKEN SKEWERS

SKEWERS

WARMING TRAY

SPLIT 120 (4 GUIAS)

1/2 PIZZA SHEETS

MEAT TONGS 330 MM

PIRA
70 LUX

85 covers

- Made of cast iron
- Piracold® regrigeration system
- 7 guides
- Front ash drawer
- Built-in firebreak inside the oven
- Analog temperature display
- Exhaust switch to control air flow
- Built-in grease collector

PIRA 70 LUX	
REF.	450.102

PIRA 70 LUX SD	
REF.	450.103

PIRA 70 LUX ED	
REF.	450.104

TECHNICAL INFORMATION			
Average production	60 Kg/h	Capacity in GN trays	1xGN 1/1
Maximum charcoal capacity	3 Kg	Smoke Outlet	180mm
Maximum charcoal consumption	4 Kg per service	Net weight LUX / Net weight LUX SD	146 Kg / 155 Kg
Fire up time	30 min.	Net weight LUX ED	187 Kg
Cooking temperature	180ºC to 350ºC	Power equivalence	3.0 KW

DIMENSIONS PIRA 70 LUX/LUX SD

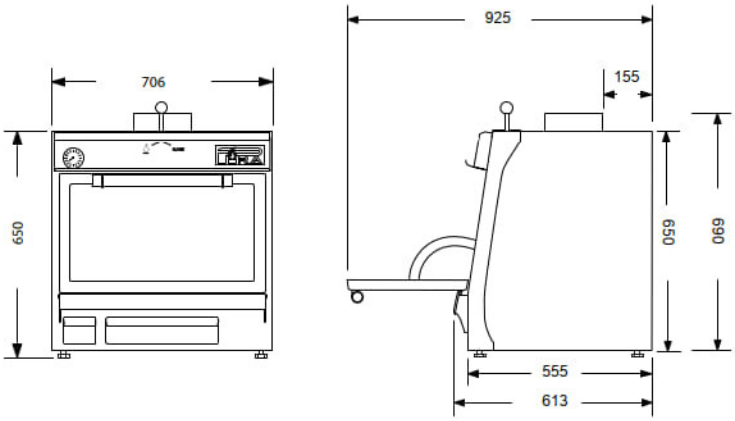

DIMENSIONS PIRA 70 LUX ED

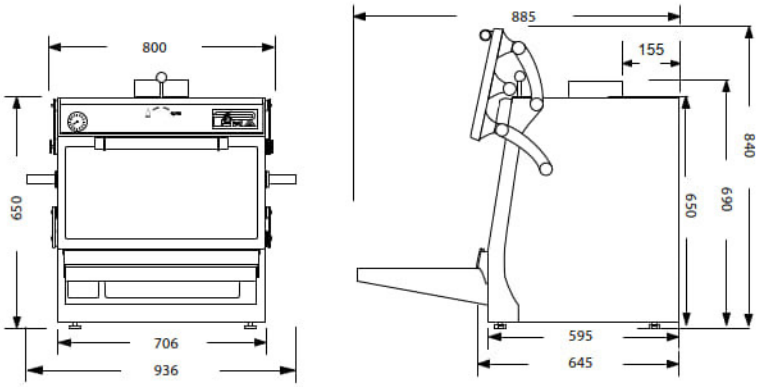

INCLUDED ACCESSORIES

REF.	DESCRIPTION
950.005	Meat Tongs 330 mm
950.001	Poker
900.045	Rod Grill 70 LUX (585x465)
902.945	Front Inox Table 29 cm 70 ED

ROD GRILL

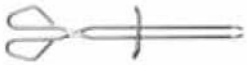

MEAT TONGS 330

POKER

FRONT INOX TABLE 29 CM

Diego Gallegos,"el chef del caviar" in the Sollo Restaurant kitchen, 1 Michelin star in Fuengirola.

ACCESSORIES

REF.	DESCRIPTION
750.001	Coupler Ring
750.002	External Airflow Regulator
750.003	External Firebreak*
750.004	Inox Hat
750.005	Adapter

*Mandatory External firebreak. Info pag 42/43

901.045	Grooved Grill 70 (515x470)
960.045	Griddle Plate 70 (525x470)
965.070	Skewers Support 70 (capacity 8 u.)
961.070	Pizza Baking Sheet 70 (570x430)
955.070	Skewers 70
950.004	Meat Tongs TOP 400 mm
920.045	Warming Tray 70
924.045	Warming Tray 70 ED
904.045	Front Inox Table 40 cm 70 ED
770.245	Coal Bunker Table Pira 70
770.345	Coal Bunker Table Pira 70 SILVER

GROOVED GRILL

GRIDDLE PLATE

SKEWERS SUPPORT

WARMING TRAY

COAL BUNKER TABLE PIRA 70 LUX

COAL BUNKER TABLE PIRA 70 SILVER

PIZZA SHEET 70'

MEAT TONGS TOP 400 MM

PIRA
70 XL LUX

CE PG

100 covers

- Made of cast iron
- Piracold® regrigeration system
- 7 guides
- Front ash drawer
- Built-in firebreak inside the oven
- Analog temperature display
- Exhaust switch to control air flow
- Built-in grease collector

Pira assessor chef in training classroom.

PIRA 70 XL LUX	
REF.	480.102

PIRA 70 XL LUX SD	
REF.	480.103

PIRA 70 XL LUX ED	
REF.	480.104

TECHNICAL INFORMATION			
Average production	65 Kg/h	Capacity in GN trays	1xGN 1/1 + 1xGN 2/4 1xGN 1/1 + 1xGN 1/3 + 1xGN 1/6
Maximum charcoal capacity	4 Kg	Smoke Outlet	180mm
Maximum charcoal consumption	5 Kg per service	Net weight LUX / Net weight LUX SD	158 kg / 167 Kg
Fire up time	30 min.	Net weight LUX ED	200 Kg
Cooking temperature	180ºC to 350ºC	Power equivalence	3.5 KW

DIMENSIONS PIRA 70 XL LUX/LUX SD

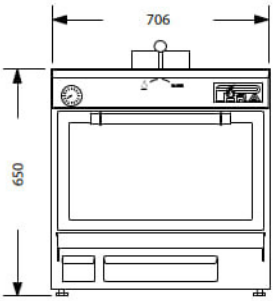

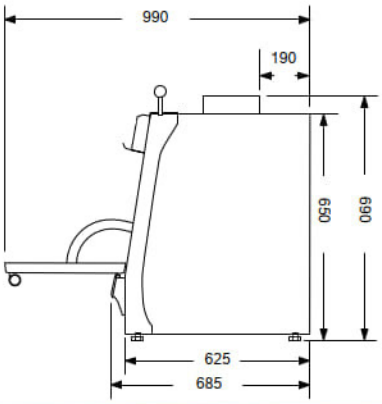

DIMENSIONS PIRA 70 XL LUX ED

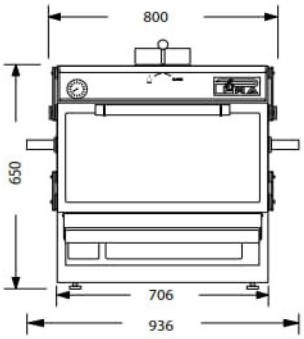

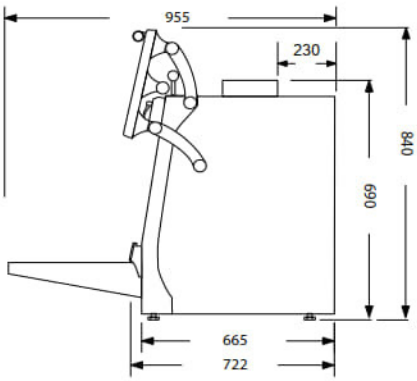

INCLUDED ACCESSORIES

REF.	DESCRIPTION
950.005	Meat Tongs 330 mm
950.001	Poker
900.048	Rod Grill 70 XL LUX (585x535)
902.945	Front Inox Table 29 cm 70/70xl ED

ROD GRILL

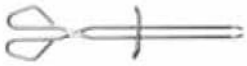

MEAT TONGS 330

POKER

FRONT INOX TABLE 29 CM 70/70xl ED

Integrate Pira charcoal ovens in its kitchen it is Xitos bet to obtain all the #Piraflavour.

ACCESSORIES

REF.	DESCRIPTION
750.001	Coupler Ring
750.002	External Airflow Regulator
750.003	External Firebreak*
750.004	Inox Hat
750.005	Adapter

*Mandatory External firebreak. Info pag 42/43

901.048	Grooved Grill 70 XL (515x540)
960.048	Griddle Plate 70 XL (525x540)
965.077	Skewers Support 70 XL (capacity 8 u.)
961.048	Pizza Baking Sheet 70 XL (570x500)
955.080	Skewers 70xl/80
950.004	Meat Tongs TOP 400 mm
920.048	Warming Tray 70 XL
924.048	Warming Tray 70 XL ED
904.045	Front Inox Table 40 cm 70 XL ED
770.248	Coal Bunker Table Pira 70 XL
770.348	Coal Bunker Table Pira 70 XL SILVER

GROOVED GRILL

GRIDDLE PLATE

SKEWERS SUPPORT

WARMING TRAY

COAL BUNKER TABLE PIRA 70 LUX

COAL BUNKER TABLE PIRA 70 SILVER

PIZZA SHEET 70 XL

MEAT TONGS TOP 400 MM

PIRA
80 LUX

CE PG

115 covers

- Made of cast iron
- Piracold® regrigeration system
- 7 guides
- Front ash drawer
- Built-in firebreak inside the oven
- Analog temperature display
- Exhaust switch to control air flow
- Built-in grease collector

PIRA 80 LUX	
REF.	490.102

PIRA 80 LUX SD	
REF.	490.103

PIRA 80 LUX ED	
REF.	490.104

TECHNICAL INFORMATION			
Average production	75 Kg/h	Capacity in GN trays	2xGN 1/1 [Different height] 1x GN 1/1 + 1xGN 2/4
Maximum charcoal capacity	4.5 Kg	Smoke Outlet	180mm
Maximum charcoal consumption	5.5 Kg per service	Net weight LUX / Net weight LUX SD	175 Kg / 186 Kg
Fire up time	30 min.	Net weight LUX ED	221 Kg
Cooking temperature	180ºC to 350ºC	Power equivalence	4.5 KW

DIMENSIONS PIRA 80 LUX/LUX SD

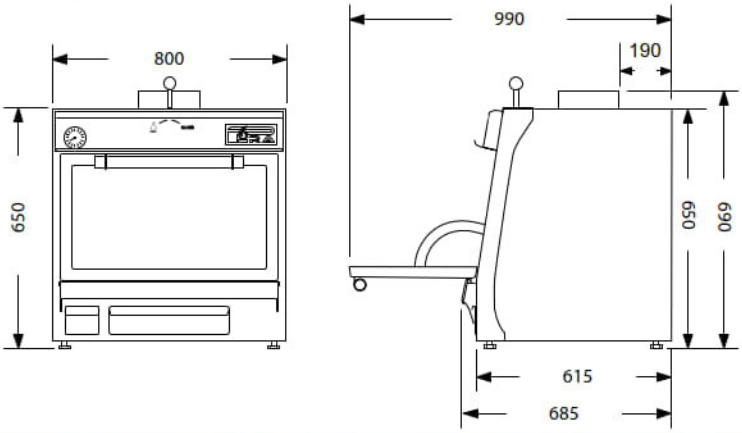

DIMENSIONS PIRA 80 LUX ED

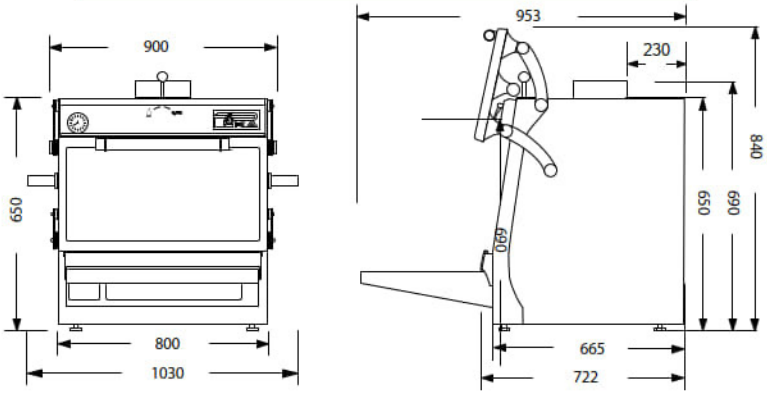

INCLUDED ACCESSORIES

REF.	DESCRIPTION
950.005	Meat Tongs 330 mm
950.001	Poker
900.049	Rod Grill 80 (685x535)
902.949	Front Inox Table 29 cm 80 ED

ROD GRILL

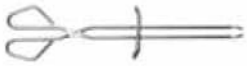

MEAT TONGS 330

POKER

FRONT INOX TABLE 29 CM

Jordi Limon, "El fermentista", Pira assessor chef, and Chef owner of the Somorrostro restaurant in Barcelona.

ACCESSORIES

REF.	DESCRIPTION
750.001	Coupler Ring
750.002	External Airflow Regulator
750.003	External Firebreak*
750.004	Inox Hat
750.005	Adapter
	*Mandatory External firebreak. Info pag 42/43
901.049	Grooved Grill 80 (615x540)
960.049	Griddle Plate 80 (625x545)
965.080	Skewers Support 80 (capacity 9 u.)
961.080	Pizza Baking Sheet 80 (660x500)
970.049	Split 80 4 guias
970.249	Split 80 7 guias
900.492	1/2 Rod Grill 80 (330x545)
901.492	1/2 Grooved Grill 80 (230x540)
960.492	1/2 Griddle Plate 80 (230x545)
955.080	Skewers 70xl/80
950.004	Meat Tongs TOP 400 mm
920.049	Warming Tray 80
924.049	Warming Tray 80 ED
904.049	Front Inox Table 40 cm 80 ED
770.249	Coal Bunker Table Pira 80
770.349	Coal Bunker Table Pira 80 SILVER

GROOVED GRILL

GRIDDLE PLATE

SKEWERS SUPPORT

WARMING TRAY

MEAT TONGS TOP 400 MM

SPLIT 80 (4 GUIAS)

COAL BUNKER TABLE PIRA 80 LUX

COAL BUNKER TABLE PIRA 80 SILVER

PIRA
90 LUX

130 covers

- Made of cast iron
- Piracold® regrigeration system
- 8 guides
- Front ash drawer
- Built-in firebreak inside the oven
- Analog temperature display
- Exhaust switch to control air flow
- Built-in grease collector

Chef Rakel Cernicharo, at Karak Restaurant (Valencia)

PIRA 90 LUX	
REF.	500.102

PIRA 90 LUX SD	
REF.	500.103

PIRA 90 LUX ED	
REF.	500.104

TECHNICAL INFORMATION			
Average production	110 Kg/h	Capacity in GN trays	2xGN 1/1
Maximum charcoal capacity	5 Kg	Smoke Outlet	180mm
Maximum charcoal consumption	6 Kg per service	Net weight LUX / Net weight LUX SD	256 Kg / 275 Kg
Fire up time	30 min.	Net weight LUX ED	303 Kg
Cooking temperature	180ºC to 350ºC	Power equivalence	6.0 KW

DIMENSIONS PIRA 90 LUX/LUX SD

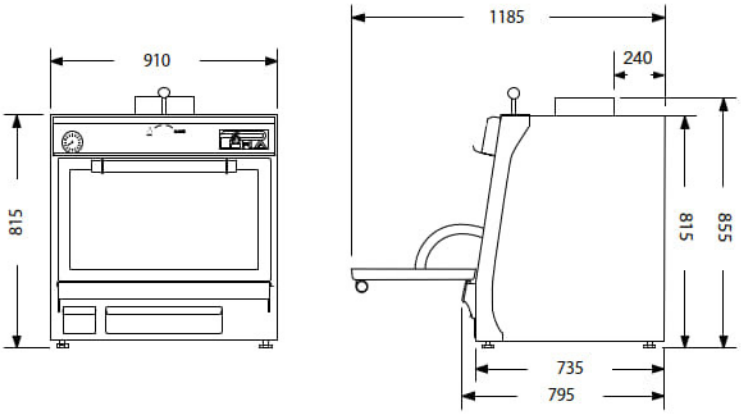

DIMENSIONS PIRA 90 LUX ED

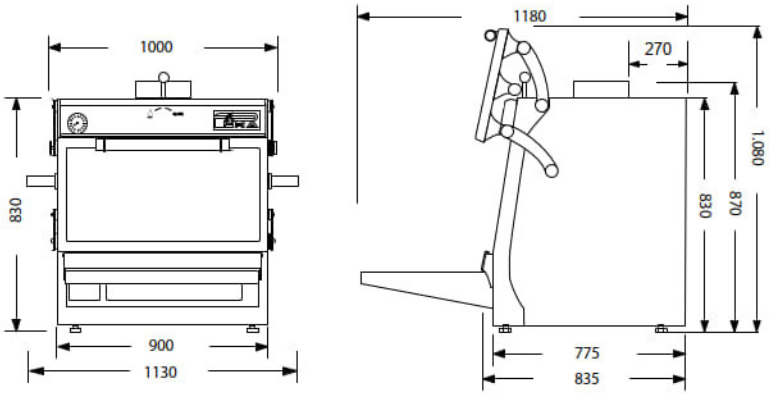

INCLUDED ACCESSORIES

REF.	DESCRIPTION
950.005	Meat Tongs 330 mm
950.001	Poker
900.050	Rod Grill 90 (780x625)
904.050	Front Inox Table 40 cm P90 ED

ROD GRILL

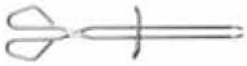

MEAT TONGS 330

POKER

FRONT INOX TABLE 40 CM

Chef Rakel Cernicharo, at Karak Restaurant, with chefs Richard Alcayde and Jordi Bataller, both Plra chef assessors by la Kocina Gastrolab (Málaga)

ACCESSORIES

REF.	DESCRIPTION
750.001	Coupler Ring
750.002	External Airflow Regulator
750.003	External Firebreak*
750.004	Inox Hat
750.005	Adapter

*Mandatory External firebreak. Info pag 42/43

901.050	Grooved Grill 90 (780x625)
960.050	Griddle Plate 90 (700x585)
965.090	Skewers Support 90 (capacity 11 u.)
965.020	Chicken Skewers Support 90 (capacity 4 u.)
961.090	1/2 Pizza Baking Sheet 90 (370x590)
970.050	Split 90 4 guias
970.052	Split 90 7 guias
900.052	1/2 Rod Grill 90 (385x625)
901.052	1/2 Grooved Grill 90 (300x585)
960.052	1/2 Griddle Plate 90 (325x587)
965.092	1/2 Skewers Support 90 (capacity 4u.)
955.090	Skewers 90/120
955.120	Chicken Skewers 90/120
950.004	Meat Tongs TOP 400 mm
920.050	Warming Tray 90
924.050	Warming Tray 90 ED
902.950	Front Inox Table 29 cm 90 ED
770.250	Coal Bunker Table Pira 90
770.350	Coal Bunker Table Pira 90 SILVER

GROOVED GRILL

GRIDDLE PLATE

SKEWERS SUPPORT

CHICKEN SKEWERS SUPPORT

WARMING TRAY

SPLIT 90 (4 GUIAS)

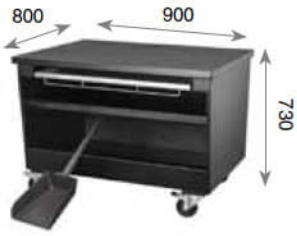

COAL BUNKER TABLE PIRA 90 LUX

COAL BUNKER TABLE PIRA 90 SILVER

MEAT TONGS TOP 400 MM

PIRA
90D LUX SD/ED

CE PG

180 covers

- Made of cast iron
- Piracold® regrigeration system
- 8 guides upper chamber
- 7 guides lower chamber
- Front ash drawer
- Built-in firebreak inside the oven
- Analog temperature display
- Exhaust switch to control air flow
- Built-in grease collector

PIRA 90D LUX SD/ED	
REF.	170.102

TECHNICAL INFORMATION	
Average production	145 Kg/h
Max charcoal capacity	5 Kg
Max charcoal comsumption	6 Kg per service
Fire up time	30 min.
Capacity in GN trays	2xGN 1/1
Smoke Outlet	180 mm
Net Weight	486 Kg
Cooking temperature	180ºC to 350ºC
Power equivalence	6.0 KW

DIMENSIONS PIRA 90D LUX SD/ED

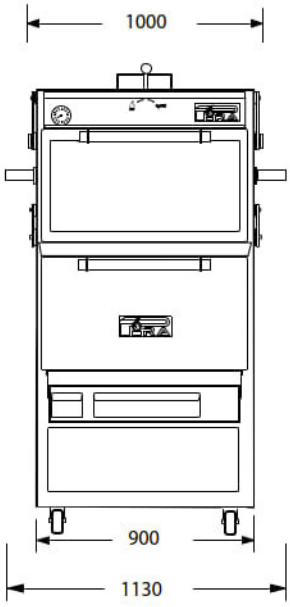

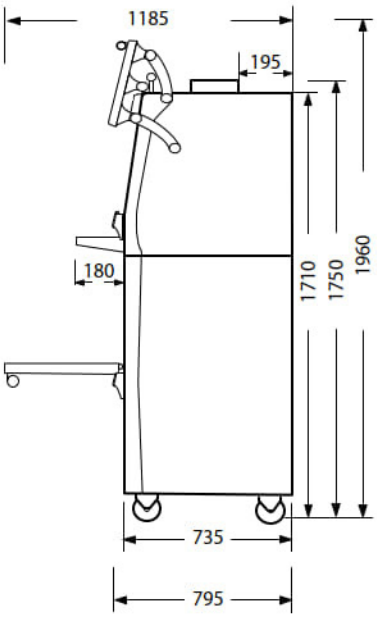

INCLUDED ACCESSORIES

REF.	DESCRIPTION
950.005	Meat Tongs TOP 400 mm
950.001	Poker
900.050	Rod Grill 90 (780x625)
904.150	Front Inox Table 18 cm P90 ED

ROD GRILL

MEAT TONGS TOP 400 MM

POKER

FRONT INOX TABLE 40 CM

Detail of Chicken Skewers for Oven 90D SD/ED in Tramvai a Crema ristorante

ACCESSORIES

REF.	DESCRIPTION
759.007	External Firebreak* 90
759.008	Inox Hat 90

*Mandatory External firebreak. Info pag 42/43

901.050	Grooved Grill 90 (780x625)
960.050	Griddle Plate 90 (700x585)
965.090	Skewers Support 90 (capacity 11 u.)
965.020	Chicken Skewers Support 90 (capacity 4 u.)
961.090	1/2 Pizza Baking Sheet 90 (370x590)
970.050	Split 90 4 guias
970.052	Split 90 7 guias
900.052	1/2 Rod Grill 90 (385x625)
901.052	1/2 Grooved Grill 90 (300x585)
960.052	1/2 Griddle Plate 90 (325x587)
965.092	1/2 Skewers Support 90 (capacity 4u.)
955.090	Skewers 90/120
955.120	Chicken Skewers 90/120
950.004	Meat Tongs 330 mm
924.050	Warming Tray 90 ED

GROOVED GRILL

GRIDDLE PLATE

SKEWERS SUPPORT

CHICKEN SKEWERS SUPPORT

WARMING TRAY

SPLIT 90 (4 GUIAS)

1/2 ROD GRILL 90

1/2 GROOVED GRILL 90

1/2 PIZZA SHEET 90

MEAT TONGS 330 MM

PIRA
120 LUX

175 covers

- Made of cast iron
- Piracold® regrigeration system
- 7 guides
- Front ash drawer
- Built-in firebreak inside the oven
- Analog temperature display
- Exhaust switch to control air flow
- Built-in grease collector

Chef Pablo Routin, Pira assessor chef in action.

PIRA 120 LUX	
REF.	120.102

PIRA 120 LUX SD	
REF.	120.103

PIRA 120 LUX ED	
REF.	120.104

TECHNICAL INFORMATION			
Average production	150 Kg/h	Capacity in GN trays	3xGN 1/1
Maximum charcoal capacity	6 Kg	Smoke Outlet	210mm
Maximum charcoal consumption	6 Kg per service	Net weight LUX / Net weight LUX SD	335 Kg / 360 Kg
Fire up time	30 min.	Net weight LUX ED	391 Kg
Cooking temperature	180ºC to 350ºC	Power equivalence	8.0 KW

DIMENSIONS PIRA 120 LUX/LUX SD

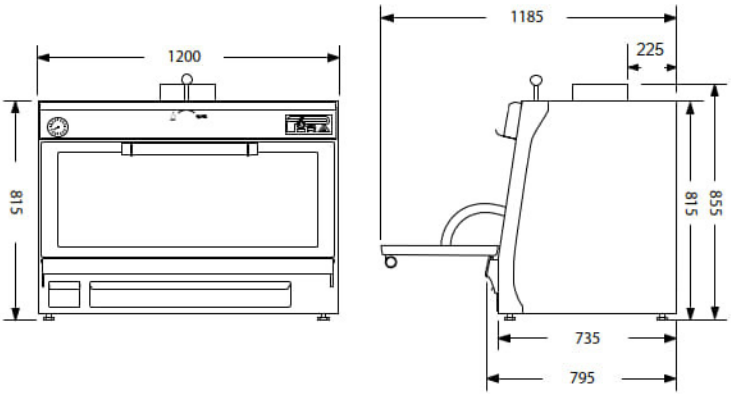

DIMENSIONS PIRA 120 LUX ED

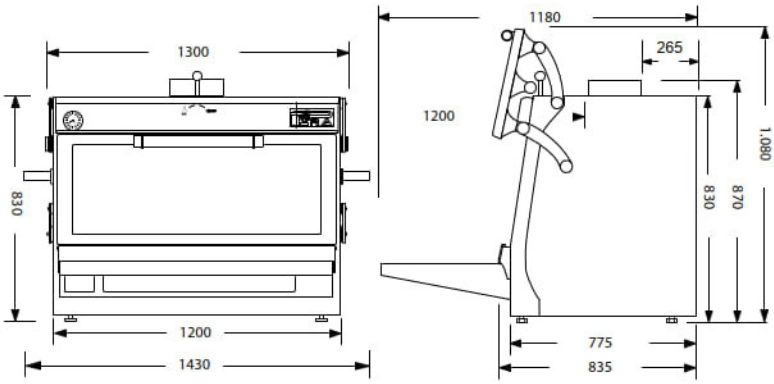

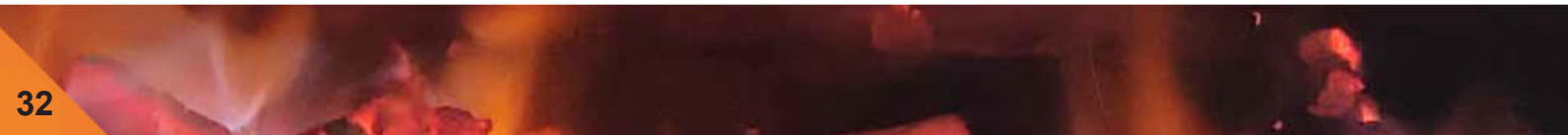

INCLUDED ACCESSORIES

REF.	DESCRIPTION
950.005	Meat Tongs 330 mm
950.008	Poker
900.120	Rod Grill 120 (1060x625)
904.012	Front Inox Table 40 cm 120 ED

ROD GRILL

MEAT TONGS 330

POKER

FRONT INOX TABLE 40 CM

Chef Jordi Limón,"El Fermentista" during a cooking show in our training room.

ACCESSORIES

REF.	DESCRIPTION
750.007	External Firebreak* 120
750.008	Inox Hat 120
	*Mandatory External firebreak. Info pag 42/43
901.120	Grooved Grill 120 (990x585)
965.120	Skewers Support 120 (capacity 15 u.)
965.021	Chicken Skewers Support 120 (capacity 5 u.)
961.120	1/2 Pizza Baking Sheet 120 (520x590)
970.120	Split 120 4 guias
970.122	Split 120 5 guias
900.122	1/2 Rod Grill 120 (535x625)
901.122	1/2 Grooved Grill 120 (460x585)
960.122	1/2 Griddle Plate 120 (458x590)
965.122	1/2 Skewers Support 120 (capacity 6 u.)
955.090	Skewers 90/120
955.120	Chicken Skewers 90/120
950.004	Meat Tongs TOP 400 mm
920.120	Warming Tray 120
924.120	Warming Tray 120 ED
902.912	Front Inox Table 29 cm 120 ED
770.220	Coal Bunker Table Pira 120
770.320	Coal Bunker Table Pira 120 SILVER

GROOVED GRILL

GRIDDLE PLATE

SKEWERS SUPPORT

CHICKEN SKEWERS SUPPORT

WARMING TRAY

SPLIT 120 (4 GUIAS)

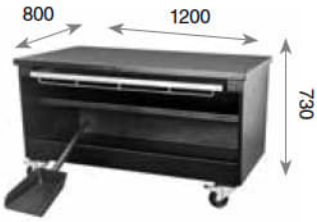

COAL BUNKER TABLE PIRA 120 LUX

COAL BUNKER TABLE PIRA 120 SILVER

MEAT TONGS TOP 400 MM

PIRA
120D LUX SD/ED

CE

250 covers

- Made of cast iron
- Piracold® regrigeration system
- 6 guides upper chamber
- 6 guides lower chamber
- Front ash drawer
- Built-in firebreak inside the oven
- Analog temperature display
- Exhaust switch to control air flow
- Built-in grease collector

PIRA 120D LUX SD/ED	
REF.	120.108

TECHNICAL INFORMATION	
Average production	200 Kg/h
Max charcoal capacity	7 Kg
Max charcoal comsumption	7 Kg per service
Fire up time	30 min.
Capacity in GN trays	2xGN 1/1
Smoke Outlet	210 mm
Net Weight	730 Kg
Cooking temperature	180ºC to 350ºC
Power equivalence	8.0 KW

DIMENSIONS PIRA 120D LUX SD/ED

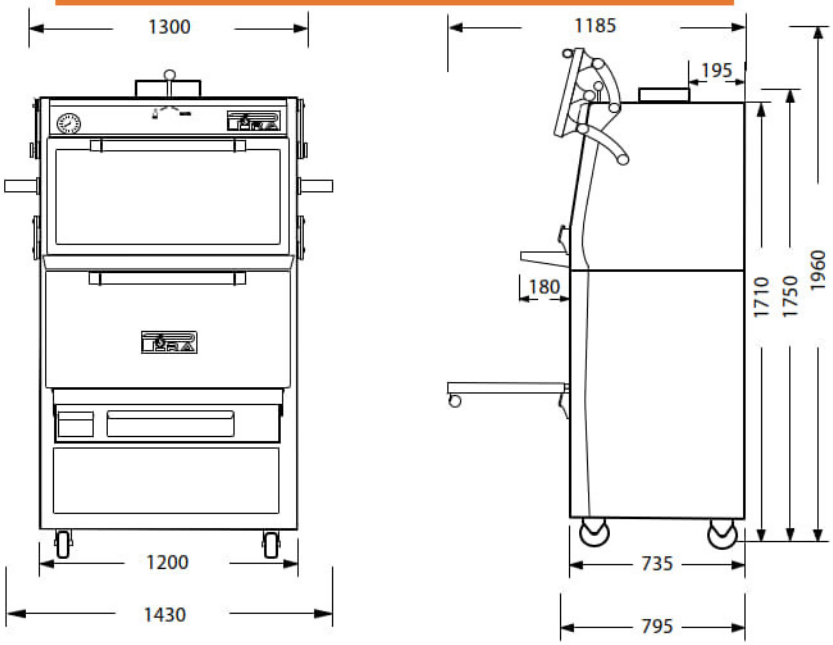

INCLUDED ACCESSORIES

REF.	DESCRIPTION
950.005	Meat Tongs 330 mm
950.008	Poker
900.120	Rod Grill 120 (1060x625)

ROD GRILL

MEAT TONGS 330 MM

POKER

FRONT INOX TABLE 40 CM

ACCESSORIES

REF.	DESCRIPTION
750.007	External Firebreak* 120
750.008	Inox Hat 120
	*Mandatory External firebreak. Info pag 42/43
901.120	Grooved Grill 120 (990x585)
965.120	Skewers Support 120 (capacity 15 u.)
965.021	Chicken Skewers Support 120 (capacity 5 u.)
961.120	1/2 Pizza Baking Sheet 120 (520x590)
970.120	Split 120 4 guias
970.122	Split 120 5 guias
900.122	1/2 Rod Grill 120 (535x625)
901.122	1/2 Grooved Grill 120 (460x585)
960.122	1/2 Griddle Plate 120 (458x590)
965.122	1/2 Skewers Support 120 (capacity 6u.)
955.090	Skewers 90/120
955.120	Chicken Skewers 90/120
950.004	Meat Tongs TOP 400 mm
924.120	Warming Tray 120 ED

GROOVED GRILL

GRIDDLE PLATE

CHICKEN SKEWERS SUPPORT

SKEWERS SUPPORT

CHICKEN SKEWERS

SKEWERS

WARMING TRAY

SPLIT 120 (4 GUIAS)

MEAT TONGS TOP 400 MM

PIRA
BLACK LINE

- Made of cast iron
- Piracold® regrigeration system
- Multiple cooking guides
- Front ash drawer
- Built-in firebreak inside the oven
- Analog temperature display
- Exhaust switch to control air flow
- Built-in grease collector

Chef Jose Corts at Mamá Chicó Restaurant, in Arteixo (Galicia).
Photo July 2020.

INCLUDED ACCESSORIES

REF.	DESCRIPTION
950.005	Meat Tongs 330 mm
950.001	Poker
900.045	Rod Grill 70 LUX (585x465)
900.049	Rod Grill 80 LUX (685x535)
900.050	Rod Grill 90 LUX (780x625)

ROD GRILL

MEAT TONGS 330

POKER

ACCESSORIES CHIMNEY

REF.	DESCRIPTION
750.001	Coupler Ring
750.002	External Airflow Regulator
750.003	External Firebreak*
750.004	Inox Hat
750.005	Adapter

*Mandatory External firebreak. Info pag 42/43

TECHNICAL INFORMATION

Charcoal Oven Model	Pira 70 BLACK	PIRA 80 BLACK	PIRA 90 BLACK
Average production	60 Kg/h	75 Kg/h	110 Kg/h
Maximum charcoal capacity	3 Kg	4.5 Kg	5 Kg
Maximum charcoal consumption	4 Kg per service	5.5 Kg per service	6 Kg per service
Fire up time	30 min.	30 min.	30 min.
Capacity in GN trays	1xGN 1/1	2xGN 1/1 [Different Height] 1x GN 1/1 + 1xGN 2/4	2xGN 1/1
Smoke Outlet	180 mm.	180 mm.	180 mm.
Net weight	146 Kg	175 Kg	256 Kg
Power equivalence	3.0 KW	4.5 KW	6.0 KW

PIRA 70 BLACK

REF.	450.101

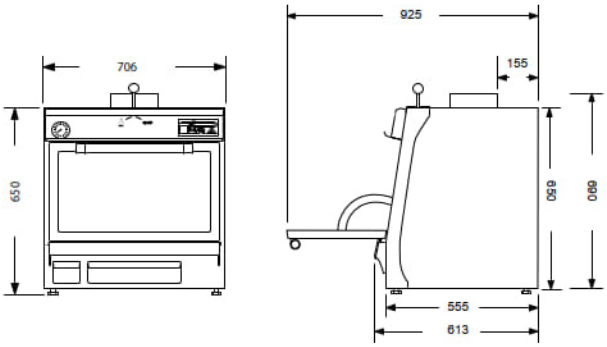

ACCESSORIES

REF.	DESCRIPTION
901.045	Grooved Grill 70 (515x470)
960.045	Griddle Plate 70 (525x470)
965.070	Skewers Support 70 (capacity 8 u.)
961.070	Pizza Baking Sheet 70 (570x430)
955.070	Skewers 70
950.004	Meat Tongs TOP 400 mm
920.045	Warming Tray 70
770.245	Coal Bunker Table Pira 70
770.345	Coal Bunker Table Pira 70 SILVER

PIRA 80 BLACK

REF.	490.101

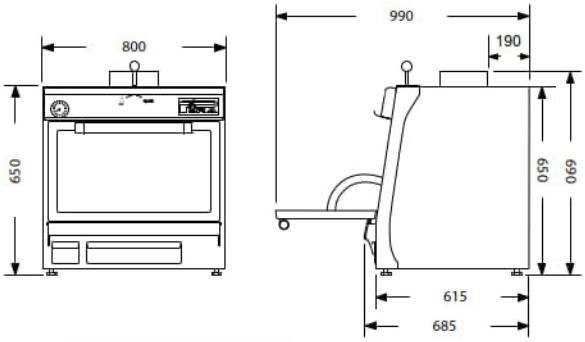

COAL BUNKER TABLE PIRA 80

WARMING TRAY

ACCESSORIES

REF.	DESCRIPTION
901.049	Grooved Grill 80 (615x540)
960.049	Griddle Plate 80 (625x545)
965.080	Skewers Support 80 (capacity 9 u.)
961.080	Pizza Baking Sheet 80 (660x500)
970.049	Split 80 4 guias
970.249	Split 80 7 guias
900.492	1/2 Rod Grill 80 (330x545)
901.492	1/2 Grooved Grill 80 (230x540)
960.492	1/2 Griddle Plate 80 (230x545)
955.080	Skewers 70xl/80
950.004	Meat Tongs TOP 400 mm
920.049	Warming Tray 80
770.249	Coal Bunker Table Pira 80
770.349	Coal Bunker Table Pira 80 SILVER

PIRA 90 BLACK

REF.	500.101

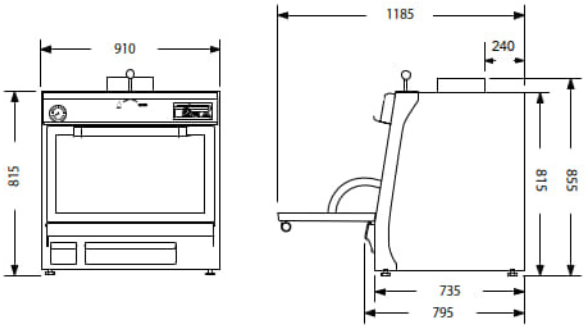

GROOVED GRILL

GRIDDLE PLATE

ACCESSORIES

REF.	DESCRIPTION
901.050	Grooved Grill 90 (780x625)
960.050	Griddle Plate 90 (700x585)
965.090	Skewers Support 90 (capacity 11 u.)
965.020	Chicken Skewers Support 90 (capacity 4 u.)
961.090	1/2 Pizza Baking Sheet 90 (370x590)
970.050	Split 90 4 guias
970.052	Split 90 7 guias
900.052	1/2 Rod Grill 90 (385x625)
901.052	1/2 Grooved Grill 90 (300x585)
960.052	1/2 Griddle Plate 90 (325x587)
965.092	1/2 Skewers Support 90 (capacity 4u.)
955.090	Skewers 90/120
955.120	Chicken Skewers 90/120
950.004	Meat Tongs TOP 400 mm
924.050	Warming Tray 90
770.250	Coal Bunker Table Pira 90
770.350	Coal Bunker Table Pira 90 SILVER

PIRA

Chimney KIT

PIRA ovens are equipped with an integrated firebreak and an airflow regulator, ready to operate from the first moment simply by placing them under a hood. The smoke exit diameter is 180 or 210 mm, depending on the model.

If you want to install a PIRA oven in a kitchen together with the other cooking elements, although our oven already has a built-in firebreak and air outlet regulator, we recommend installing the oven with at least the external firebreak and the hat.

The external firebreak guarantees, like the internal one, that there are no flames or sparks that could come out through the smoke exit, but since it is visible to the naked eye, unlike the internal firebreak, there is no possibility of starting the oven without realizing about its absence.

In accordance with the existing legislation in certain countries, there is also the possibility of acquiring these accessories as external elements for the oven. The regulations in most countries indicate that there must be an independent smoke exit for the fumes originated from solid fuels (firewood or charcoals) and in some cases it is required a visible to the naked eye firebreak, so it will always be necessary to observe the applicable legislation. Thus, taking into account the legislation and the customer's needs, the chimney kit can be adapted to all needs.

For greater efficiency, all PIRA ovens must be installed under an extractor hood, allowing two possibilities:

-Installation with direct connection from the oven's smoke exit to the outside, without using any of our accessories chimney kit. Despite this, we will need to use an extractor hood for efficient evacuation of the cooking fumes that will come out of the oven when the door is opened.

-Install the chimney kit in one of its multiple versions, this is the most common option chosen by professionals.

The chimney Kit is available in two versions, a chimney kit with a not modular firebreak and a chimney kit with a modular firebreak.

Chimney kit with non modular firebreak

Kit available for the models Pira 50, 70, 70xl, 80, 90 and 90D.
It can be chosen with or without external regulator, always taking into account country regulations, the components of the chimney kit are:

Hat:
It slightly lowers the temperature of the smoke, ensuring a better flow and supplements the security of the interior firebreak by preventing anything from entering the oven through the chimney.

External firebreak:
Like the inner firebreak, it prevents any spark or flame from coming out. Important, never wash under water.

External Regulator:
It regulates the smoke exit with an external device, in addition its tube shape also guarantees a better flow.

Coupler ring:
Part needed to fit the External firebreak without the External Regulator.

Adapter:
Reduction of the smoke exit and hot air from the oven, from 180 mm to 150 mm.

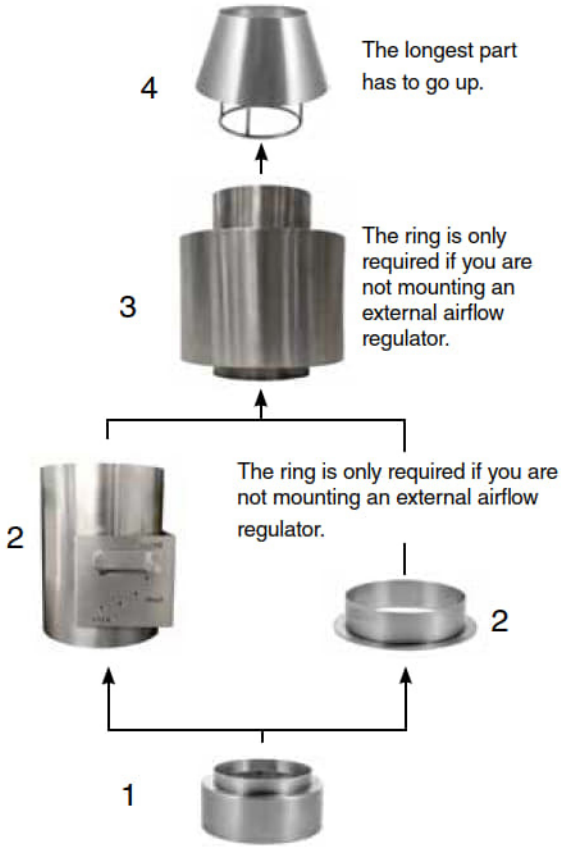

Chimney kit with non-modular firebreak and external regulator.

Chimney kit with non-modular firebreak

Chimney kit with modular firebreak

For PIRA 120 ovens, the only chimney kit possible is a FIREBREAK120 + HAT 120. This revolutionary kit is removable and allows the user to wash it with water, without fear of obstructing the firebreak airflow.

It is common that in non-modular firebreaks, which have to be cleaned hitting it with small blows, some users put the firebreak under water to clean it, this is a misktake, because the traces of soot plus the traces of wáter form a pasty mixture similar to cement that will make the external firebreak useless.

We also have the option of non modular firebreak chimney kit for the rest of the models, and also in a shorter version.

This KIT also offers the possibility of a totally blind hat for the chimney kit.

Chimney kit with modular firebreak.

Short Chimney kit with modular firebreak.

Short Blind Chimney kit with modular firebreak.

BARBECUES

Pira assessor chef with a Pira Barbecue BBQ M150 with casserole support kit, Griddle plate and warming column. Photo January 2021

PIRA
BBQ-M80

100 covers

- Made of cast iron
- Hopper elevation system
- Fully insulated walls and background
- Removable grill
- Removable front grease collector
- Front ash drawer
- Nylon casters

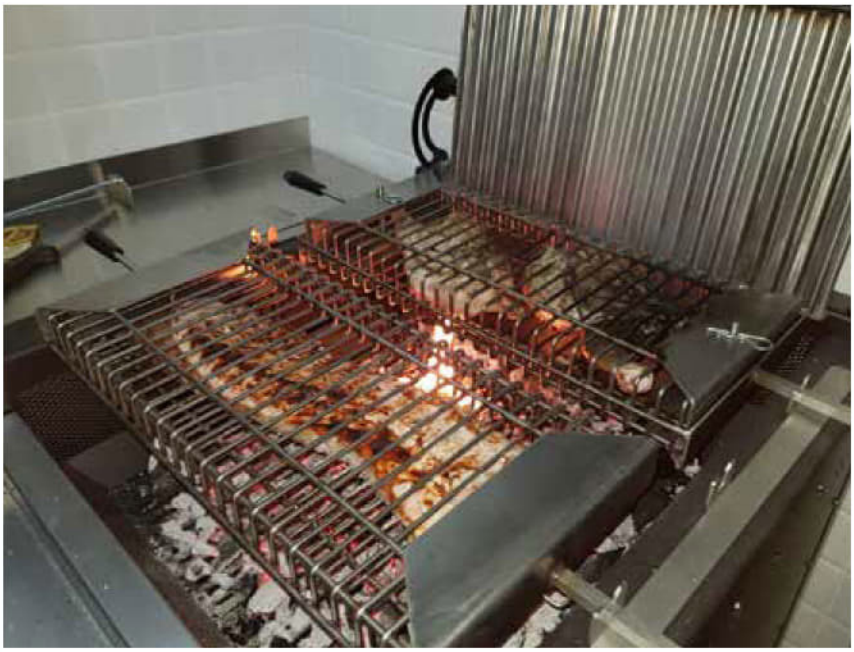

INCLUDED ACCESSORIES	
REF.	DESCRIPTION
950.005	Meat Tongs 330 mm
950.001	Poker
901.022	Grooved grill (620 x 780)

POKER

GROOVED GRILL

MEAT TONGS

PIRA BBQ-M80	
REF.	800.000

TECHNICAL INFORMATION	
Average production	40 Kg/h
Maximum charcoal consumption	5-7 Kg per service
Fire up time	30 min.
Cooking temperature	from 180ºC to 350ºC
Net weight	240 Kg
Power Equivalence	3.5 KW

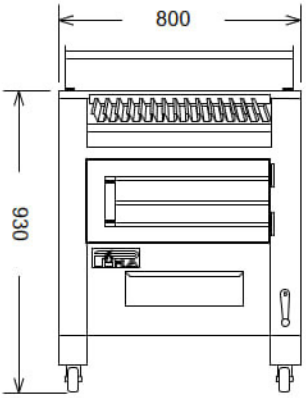

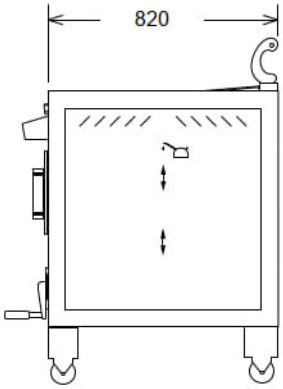

ACCESSORIES	
REF.	DESCRIPTION
900.022	Rod grill (620 x 730)
901.024	Griddle (620 x 780)
900.222	1/2 Rod grill (310 x 730)
901.222	1/2 Grooved grill (310 x 730)
901.224	1/2 Griddle (310 x 780)
903.000	Rotatory grill (700 x 320)
904.001	Rotatory grill support kit
904.002	Rotatory grill handle

ACCESSORIES	
REF.	DESCRIPTION
902.044	Casserole support kit (620 x 730)
905.001	Skewer support kit BBQ M80/150
905.000	Skewer BBQ
920.080	Warming column BBQ 80
920.081	Warming grill BBQ 80
905.003	Coal shovel
909.050	Inox lateral table (810 x 350)
909.000	Black lateral table (810 x 350)
950.004	Meat Tongs TOP 400 mm

ROD GRILL

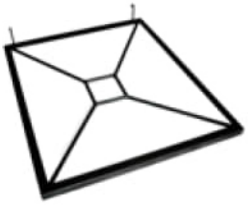
CASSEROLE SUPPORT KIT

ROTATORY GRILL HANDLE

WARMING GRILL

WARMING COLUMN

GRIDDLE

ROTATORY GRILL

ROTATORY GRILL SUPPORT

SKEWER SUPPORT KIT

SKEWER

INOX LATERAL TABLE

1/2 GROOVED GRILL

1/2 ROD GRILL

1/2 GRIDDLE

Restaurant L' Aia della Baronessa in Piana(Salerno), with a PIRA BBQ M80, PIRA BBQ M120 and PIRA 90 LUX

PIRA
BBQ-M120

170 covers

- Made of cast iron
- Hopper elevation system
- Fully insulated walls and background
- Removable grill
- Removable front grease collector
- Front ash drawer
- Nylon casters

INCLUDED ACCESSORIES	
REF.	DESCRIPTION
950.005	Meat Tongs 330 mm
950.001	Poker
901.023	Grooved grill (495 x 780) x 2

POKER

GROOVED GRILL

MEAT TONGS

PIRA BBQ-M120	
REF.	120.000

TECHNICAL INFORMATION	
Average production	68 Kg/h
Maximum charcoal consumption	14 Kg per service
Fire up time	30 min.
Cooking temperature	from 180ºC to 350ºC
Net weight	410 Kg
Power Equivalence	5.5 KW

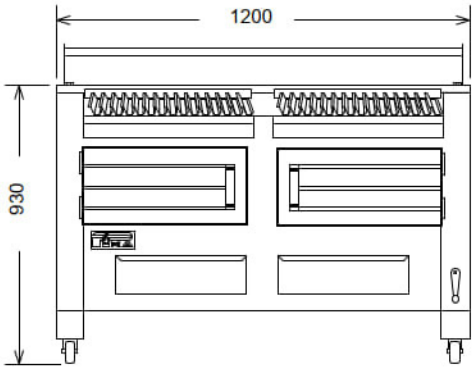

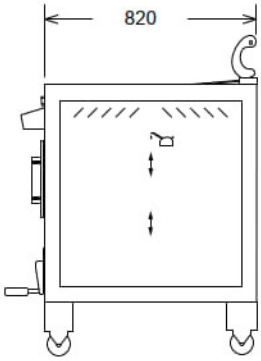

ACCESSORIES	
REF.	DESCRIPTION
900.023	Rod grill (495 x 730)
901.034	Griddle (495 x 780)
904.101	Rotatory grill (1050 x 320)
904.001	Rotatory grill support kit
904.002	Rotatory grill handle
905.002	Skewer support kit BBQ M120
905.000	Skewer BBQ

ACCESSORIES	
REF.	DESCRIPTION
902.045	Casserole support kit (620 x 730)
920.320	Warming column BBQ 80
920.321	Warming grill BBQ 80
905.003	Coal shovel
909.050	Inox lateral table (810 x 350)
909.000	Black lateral table (810 x 350)
950.004	Meat Tongs TOP 400 mm

ROD GRILL

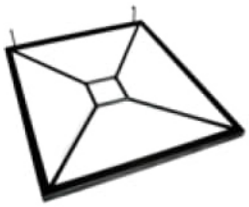
CASSEROLE SUPPORT KIT

ROTATORY GRILL HANDLE

WARMING GRILL

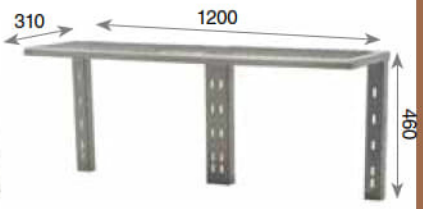

WARMING COLUMN

GRIDDLE

ROTATORY GRILL

ROTATORY GRILL SUPPORT

SKEWER SUPPORT KIT

SKEWER

INOX LATERAL TABLE

BLACK LATERAL TABLE

COAL SHOVEL

MEAT TONGS TOP 400 MM

Restaurant L' Aia della Baronessa in Piana(Salerno), with a PIRA BBQ M80, PIRA BBQ M120 and PIRA 90 LUX

PIRA
BBQ-M150

200 covers

- Made of cast iron
- Hopper elevation system
- Fully insulated walls and background
- Removable grill
- Removable front grease collector
- Front ash drawer
- Nylon casters

INCLUDED ACCESSORIES	
REF.	DESCRIPTION
950.005	Meat Tongs 330 mm
950.001	Poker
901.022	Grooved grill (620 x 780) x 2

POKER

GROOVED GRILL

MEAT TONGS

PIRA BBQ-M150	
REF.	160.000

TECHNICAL INFORMATION	
Average production	80 Kg/h
Maximum charcoal consumption	14 Kg per service
Fire up time	30 min.
Cooking temperature	from 180ºC to 350ºC
Net weight	410 Kg
Power Equivalence	7.0 KW

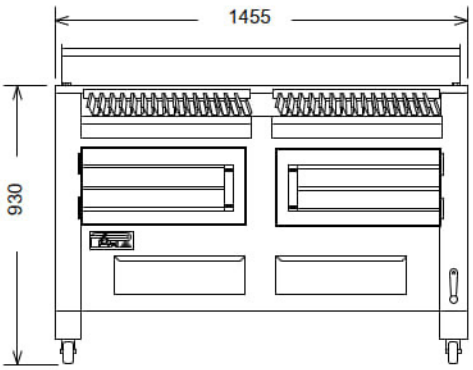

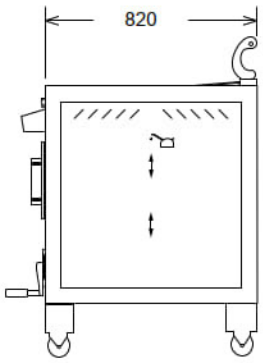

ACCESSORIES	
REF.	DESCRIPTION
900.022	Rod grill (620 x 730)
901.024	Griddle (620 x 780)
900.222	1/2 Rod grill (310 x 730)
901.222	1/2 Grooved grill (310 x 730)
901.224	1/2 Griddle (310 x 780)
904.000	Rotatory grill (1300 x 320)
904.001	Rotatory grill support kit
904.002	Rotatory grill handle

ACCESSORIES	
REF.	DESCRIPTION
902.044	Casserole support kit (620 x 730)
905.001	Skewer support kit BBQ M80/150
905.000	Skewer BBQ
920.150	Warming column BBQ 150
920.322	Warming grill BBQ 150
905.003	Coal shovel
909.050	Inox lateral table (810 x 350)
909.000	Black lateral table (810 x 350)
950.004	Meat Tongs TOP 400 mm

ROD GRILL

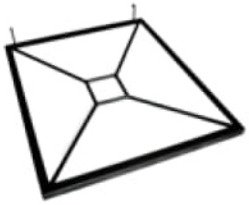
CASSEROLE SUPPORT KIT

ROTATORY GRILL HANDLE

WARMING GRILL

WARMING COLUMN

GRIDDLE

ROTATORY GRILL

ROTATORY GRILL SUPPORT

SKEWER SUPPORT KIT

SKEWER

INOX LATERAL TABLE

1/2 GROOVED GRILL

1/2 ROD GRILL

1/2 GRIDDLE

Barbacue PIRA BBQ M150 in RAMSES Restaurant, Madrid. Photo June 2020.

PIRA
BBQ-COMBI LUX 150

200 covers

- Hopper grills made of cast iron
- Lateral grills elevation system
- Column Warming Tray
- Removable grills to cook with multiple combinations
- Removable front grease collector
- Front ash drawer
- Big resistance nylon casters

PIRA BBQ-COMBI LUX 150	
REF.	140.000

TECHNICAL INFORMATION	
Average production	80 Kg/h
Maximum charcoal consumption	14 Kg per service
Fire up time	30 min.
Cooking temperature	from 80ºC to 350ºC
Net weight	335 Kg
Power Equivalence	6.0 KW

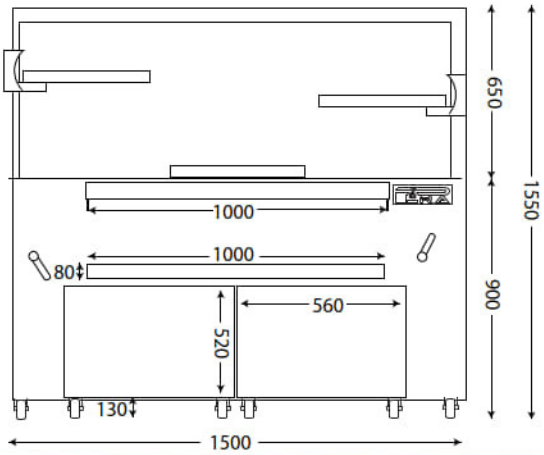

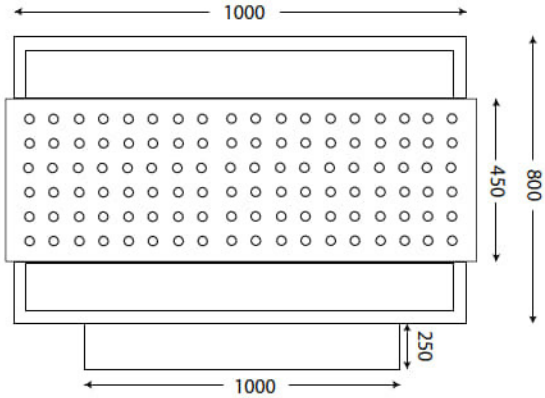

INCLUDED ACCESSORIES

REF.	DESCRIPTION
900.005	Meattongs 330 mm
900.001	Poker
900.141	Rod grill central (390x655)
900.140	Rod grill lateral (390x610)
901.140	Grooved grill lateral (380x660)
960.140	Griddle plate (450x770)

POKER

MEAT TONGS

CENTRAL RODGRILL

CENTRAL GRIDDLE PLATE

LATERAL RODGRILL

LATERAL GROOVED GRILL

ACCESSORIES

REF.	DESCRIPTION
965.123	Skewer support kit combi
955.141	Skewer combi
955.140	Chicken skewer combi
904.141	Rotatory Grill (1300 x 320)
904.140	Coal Drawer

CHICKEN SKEWERS COMBI

SKEWERS COMBI

SKEWERS SUPPORT COMBI

ROTATORY GRILL

Pira BBQ combi LUX 150 Grills Detail

PIRA
ESP-80

- Interior in refractory brick
- Iron cast hopper
- Column with 5 positions
- Top warming tray shelf
- Removable front grease collector
- Front ash drawer
- Metallic feet

PIRA ESP-80 LUX BASIC	
REF.	350.000

PIRA ESP-80 SILVER BASIC	
REF.	350.101

PIRA ESP-80 LUX COMPLET	
REF.	350.099

PIRA ESP-80 SILVER COMPLET	
REF.	350.100

INCLUDED ACCESSORIES ESP-80 BASIC	
REF.	DESCRIPTION
950.005	Meat Tongs 330 mm
950.001	Poker
923.500	Support for skewers

POKER

SUPPORT FOR SKEWERS

MEAT TONGS

Chef Xavier Bernal by el corral de Sant Quirze (Girona) and also Pira assessor chef in a formation in Pattaya (Tailandia)

INCLUDED ACCESSORIES ESP-80 COMPLET	
REF.	DESCRIPTION
923.500	Suport for skewers (755x320)
950.005	Meat Tongs 330 mm
950.001	Poker
923.501	Single skewer ESP (4 u.)
923.511	Double skewer ESP (4 u.)
923.515	Rod grill inox ESP
923.510	Grooved grill inox ESP

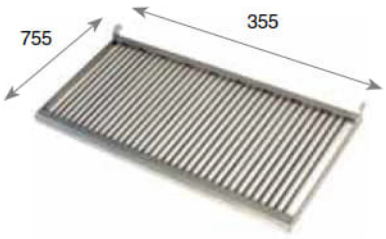

ROD GRILL INOX

DOUBLE SKEWER ESP

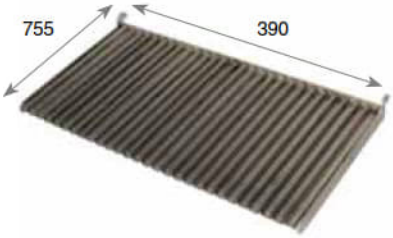

GROOVED GRILL INOX

SINGLE SKEWER ESP

ACCESORIES	
REF.	DESCRIPTION
773.500	Table ESP-80 LUX
773.501	Table ESP-80 SILVER
950.004	Meat Tongs TOP 400 mm

TECHNICAL INFORMATION	
Average production	20 Kg/h
Maximum charcoal consumption	2,5-3,5 Kg per service
Fire up time	30 min.
Cooking temperature	from 180ºC to 350ºC
Net weight	111 Kg
Power Equivalence	2.0 KW

TABLE ESP-80 SILVER

TABLE ESP-80 SILVER

MEAT TONGS TOP 400 MM

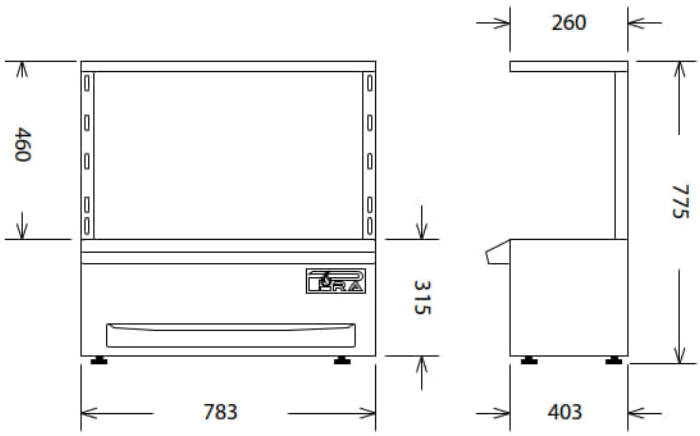

PIRA
ESP-160

- Interior in refractory brick
- Iron cast hopper
- Column with 5 positions
- Top warming tray shelf
- Removable front grease collector
- Front ash drawer
- Metallic feet

Detail in Palo Verde Restaurant (Barcelona)

PIRA ESP-160 LUX BASIC	
REF.	353.500

PIRA ESP-160 SILVER BASIC	
REF.	353.601

PIRA ESP-160 LUX COMPLET	
REF.	353.599

PIRA ESP-160 SILVER COMPLET	
REF.	353.600

INCLUDED ACCESSORIES ESP-80 BASIC	
REF.	DESCRIPTION
950.005	Meat Tongs 330 mm
950.001	Poker
923.500	Support for skewers (2 u.)

POKER

MEAT TONGS

SUPPORT FOR SKEWERS

Detail open kitchen in Palo Verde (Barcelona)

INCLUDED ACCESSORIES ESP-80 COMPLET	
REF.	DESCRIPTION
923.500	Suport for skewers (2 u.) (755x320)
950.005	Meat Tongs 330 mm
950.001	Poker
923.501	Single skewer ESP (8 u.)
923.511	Double skewer ESP (8 u.)
923.515	Rod grill inox ESP (1 u.)
923.510	Grooved grill inox ESP (1 u.)

ROD GRILL INOX

DOUBLE SKEWER ESP

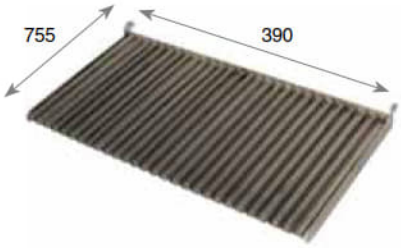

GROOVED GRILL INOX

SINGLE SKEWER ESP

ACCESORIES	
REF.	DESCRIPTION
773.535	Table ESP-160 LUX
773.536	Table ESP-160 SILVER
950.004	Meat Tongs TOP 400 mm

TECHNICAL INFORMATION	
Average production	40 Kg/h
Maximum charcoal consumption	5-7 Kg per service
Fire up time	30 min.
Cooking temperature	from 180ºC to 350ºC
Net weight	175 Kg
Power Equivalence	4.0 KW

TABLE ESP-160 SILVER

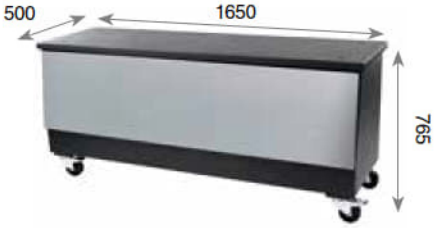

TABLE ESP-160 LUX

MEAT TONGS TOP 400 MM

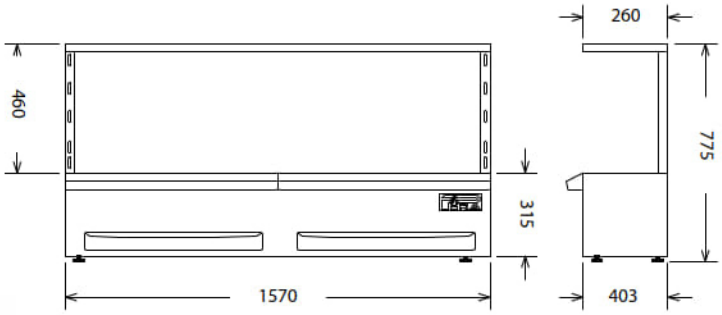

PIRA
BRA-80

- Cortallamas interno
- Mesa auxiliar accesoria
- Atizador
- Regulador de tiro
- Cámara para combustión de leña
- Cámara para combustión de carbón
- Capacidad de almacenaje de 15Kgs de Brasas

PIRA BRA-80	
REF.	580.080

INCLUDED ACCESSORIES	
REF.	DESCRIPTION
950.001	Poker

POKER

Best embers are made with the Pira brazier.

ACCESSORIES	
REF.	DESCRIPTION
770.080	Table BRA-80
759.007	External firebreak
759.008	Inox Hat
905.003	Coal Shovel

TABLE BRA-80

TECHNICAL INFORMATION	
Smoke exit	180 mm
Upper internal chamber	630 x 440 x 450 mm
Lower internal chamber	480 x 37 x 320 mm
Height to Lower Grill to Door	120 mm
Door dimensions	360 x 200 mm
Lower Grill	130 x 130 mm

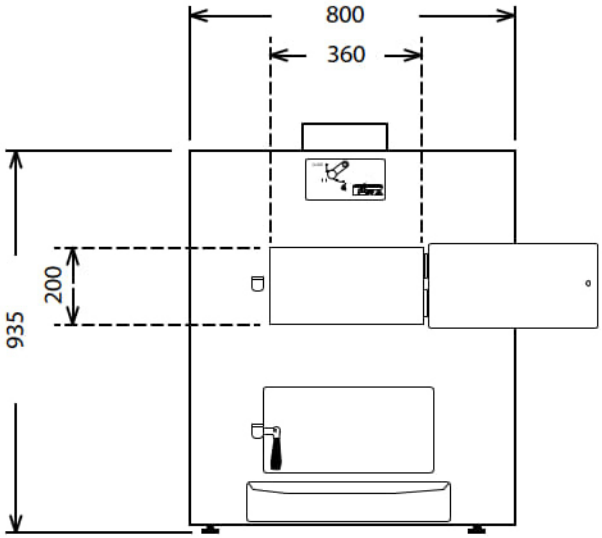

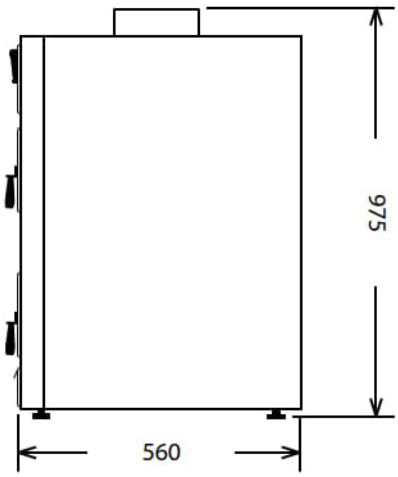

PIRA

Hand-Cast Aluminium cookware

- Cast aluminium cookware.
- Gastronorm trays.
- Gravity casting.
- Hand-made.
- Uniform temperatura distribution.
- Maximum durability.
- Non-stick coating

Pira Charcoal Ovens has designed and developed a specific line of cast aluminum cookware, consisting of pots, pans with handles and gastronorm trays, ideal for working with charcoal ovens.

These are completely handmade accessories, cast by hand, piece by piece, one by one, but at the same time with the most advanced technique of gravity casting. **Gravity casting ensures an ultra resistant molecular structure of the parts, obtaining a high temperature resistance not comparable to those manufactured in series or by injection**, which are exposed to deformations when used at high temperatures.

The molecular structure of Pira hand-made castings, together with the high conductivity of the material, guarantee a uniform and rapid temperature distribution and therefore ensure perfect cooking. To ensure maximum heat conduction, the underside of the pieces is diamond rectified. The upper part of the pieces has a non-stick coating of the highest quality, which guarantees maximum durability and easy cooking with optimal results.

The Pira cookware guarantees the authentic flavor of the Pira grill.

ALUMINIUM COOKWARE	
REF.	DESCRIPTION
931.125	GN TRAY 1/1 (325x530) 2.5 cms HEIGHT
931.165	GN TRAY 1/1 (325x530) 6.5 cms HEIGHT
932.365	GN TRAY 2/3 (325x354) 6.5 cms HEIGHT
931.265	GN TRAY 1/2 (325x265) 6.5 cms HEIGHT
931.225	GN TRAY 1/2 (325x265) 2.5 cms HEIGHT
931.365	GN TRAY 1/3 (325x176) 6.5 cms HEIGHT
931.325	GN TRAY 1/3 (325x176) 2.5 cms HEIGHT FLAT
931.326	GN TRAY 1/3 (325x176) 2.5 cms HEIGHT GRILL
931.625	GN TRAY 1/6 (162x176) 2.5 cms HEIGHT GRILL
932.425	GN TRAY 2/4 (530x162) 2.5 cms HEIGHT GRILL
937.216	CASSEROLE 16 cms 4.5 cms HEIGHT
937.220	CASSEROLE 20 cms 4.5 cms HEIGHT
937.224	CASSEROLE 24 cms 4.5 cms HEIGHT
937.228	CASSEROLE 28 cms 4.5 cms HEIGHT
937.420	CASSEROLE 20 cm 7 cms HEIGHT
937.424	CASSEROLE 24 cm 7 cms HEIGHT
937.428	CASSEROLE 28 cm 7 cms HEIGHT
936.016	GLASS COVER INOX HANDLE16 cms
936.020	GLASS COVER INOX HANDLE 20 cms
936.024	GLASS COVER INOX HANDLE 24 cms
936.028	GLASS COVER INOX HANDLE 28 cms

GN TRAY 1/3 (325X176) 2.5 CMS HEIGHT GRILL

CASSEROLE 28 CMS 4.5 CMS HEIGHT

GN TRAY

CASSEROLE

GN TRAY

GLASS COVER INOX HANDLE

GN TRAY 2/4 (530X162) 2.5 CMS HEIGHT GRILL

PIRA

Rustic cookware

- Ancestral image
- Totally handmade
- Made with the best clay
- Ultra Resistant
- Clay without metallic particles

Pira Charcoal Ovens, in the search for the authentic flavors and the most ancient image, has designed and developed a line of rustic cookware.

Like the ovens and cast aluminum cookware, this rustic line is also completely handmade, made by hand, piece by piece. The manufacturing techniques for these casseroles and dishes date back hundreds of years and capture the experience and wisdom of ancient artisans. The only manufacturing element for this cookware is the clay.

It may seem simple and basic, but it is not, quite the opposite. For the manufacture of Pira cookware, we have selected the best clay that can be found today, with a high refractory quality and without ferritic elements, to ensure once again an unsurpassed molecular structure. In the same way, we must take extreme care in the way of extraction and handling of the mud. The end result are unique ceramic pieces that are ultra resistant to high temperatures. The more they are used, the more they harden, **reaching temperatures of up to 1000 degrees without danger of breaking.**

Thus, the heat resistance of Pira rustic pieces is notably superior to the artisanal cast aluminum pieces, and obviously to the cookware that is offered commercially, whether handmade or not.

Clay pots allow a slower cooking, resulting in more tender and juicier food, enhancing its flavors and aromas, better preserving nutrients and contributing to a healthier diet.

If you want to give a more rustic and authentic grill image, this is your cookware line.

The secret of the Pira cookware is in the clay!

RUSTIC COOKWARE	
REF.	DESCRIPTION
940.015	Shallow Clay Casserole 15 cms
940.020	Shallow Clay Casserole 20 cms
940.022	Shallow Clay Casserole 22 cms
940.025	Shallow Clay Casserole 25 cms
940.030	Shallow Clay Casserole 30 cms
940.035	Shallow Clay Casserole 35 cms
940.040	Shallow Clay Casserole 40 cms

SHALLOW CLAY CASSEROLE 15 CMS

SHALLOW CLAY CASSEROLE 40 CMS

Chef Carlos Miralles, head chef at Restaurant Mar Blava in Benicarlo and Chef of the Spanish football team.

PIRA

- Inox cages
- Fish grill clamps
- Designed for charcoal ovens
- Designed for charcoal ovens
- Ideal for fish, shellfish and sea-food

INOX CAGE

The Pira's Inox Cage is ideal for cooking and braising small foods such as prawns, vegetables, artichokes and all sorts of mushrooms.

It is made of stainless steel and designed to be turned with the help of the tweezers that are supplied with the charcoal ovens.

INOX CAGES	
REF.	DESCRIPTION
950.025	Inox cage for oven 250x210x60
950.030	Inox cage for oven 300x260x60

FISH GRILL CLAMP

With the Pira's Fish Grill Clamp Inox you can roast all kinds of whole fish in your charcoal oven or barbecue without the need of tweezers and with the security of not breaking the fish when turning it.

With stainless Steel handle, for easy handling and also without legs.

Ideal for grilling fish on the grill at the style of Getaria.

FISH GRILL CLAMP	
REF.	DESCRIPTION
950.010	Fish grill clamp inox 540x180x40
950.020	Fish grill clamp inox 585x300x40

PIRA

- Inox cages
- Fish grill clamps
- Designed for charcoal ovens
- Designed for charcoal ovens
- Ideal for fish, shellfish and sea-food

INOX CAGE

The Pira's Inox Cage is ideal for cooking and braising small foods such as prawns, vegetables, artichokes and all sorts of mushrooms.

It is made of stainless steel and designed to be turned with the help of the tweezers that are supplied with the charcoal ovens.

INOX CAGES	
REF.	DESCRIPTION
950.025	Inox cage for oven 250x210x60
950.030	Inox cage for oven 300x260x60

FISH GRILL CLAMP

With the Pira's Fish Grill Clamp Inox you can roast all kinds of whole fish in your charcoal oven or barbecue without the need of tweezers and with the security of not breaking the fish when turning it.

With stainless Steel handle, for easy handling and also without legs.

Ideal for grilling fish on the grill at the style of Getaria.

FISH GRILL CLAMP	
REF.	DESCRIPTION
950.010	Fish grill clamp inox 540x180x40
950.020	Fish grill clamp inox 585x300x40

PIRA
50 HOME

45 covers

- Made of cast iron
- Piracold® regrigeration system
- 5 guides
- Front ash drawer
- Built-in firebreak inside the oven
- Analog temperature display
- Exhaust switch to control air flow

PIRA 50 BLACK	
REF.	400.101

PIRA 50 LUX	
REF.	400.102

PIRA 50 SILVER	
REF.	400.105

TECHNICAL INFORMATION			
Average production	35 Kg/h	Capacity in GN trays	1xGN 2/3
Maximum charcoal capacity	1.5 Kg	Smoke Outlet	180mm
Maximum charcoal consumption	2 Kg per service	New weight	101 Kg
Fire up time	30 min.	Power Equivalence	2.0 KW
Cooking Temperature	de 180ºC a 350ºC		

DIMENSIONS PIRA 50 BLACK/LUX/SILVER

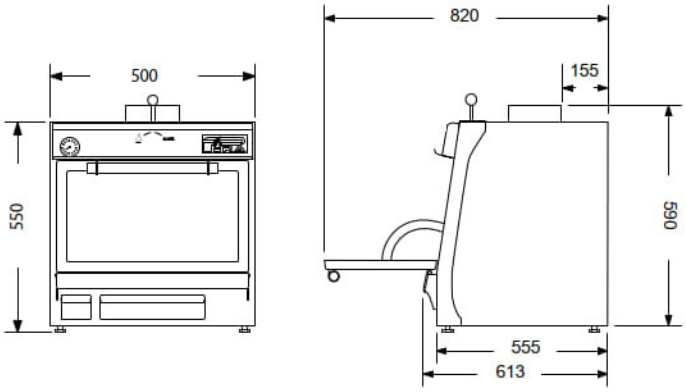

INCLUDED ACCESSORIES

REF.	DESCRIPTION
950.005	Meat Tongs 330 mm
950.000	Poker
900.040	Rod Grill 50 LUX (385x465)
759.010	Short chimney kit (Firebreak)*

ROD GRILL

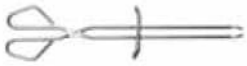

MEAT TONGS 330

POKER

SHORT CHIMNEY KIT

ACCESSORIES

REF.	DESCRIPTION
750.001	Coupler Ring
750.002	External Airflow Regulator
750.003	External Firebreak*
750.004	Inox Hat
750.005	Adapter
759.011	Short blind chimney kit (Firebreak)*

*Mandatory External firebreak. Info pag 42/43

950.004	Meat Tongs TOP 400 mm
920.040	Warming Tray 50
961.050	Pizza Baking Sheet 50 (360x430)
770.240	Coal Bunker Table Pira 50
770.340	Coal Bunker Table Pira 50 SILVER

WARMING TRAY 50

MEAT TONGS TOP 400 MM

COAL BUNKER TABLE PIRA 50

COAL BUNKER TABLE PIRA 50 SILVER

SHORT BLIND CHIMNEY KIT

PIRA
BBQ-JOBA

- Totally demountable
- Great robustness
- High production capacity
- Ash drawer
- Quality finishes
- Ideal for terraces and gardens

PIRA BBQ JOBA	
REF.	400.502

TECHNICAL INFORMATION	
Average production	15 Kg/h
Maximum charcoal consumption	2,5 I 3. Kg per service
Fire up time	30 min.
Cooking temperature	from 180ºC to 350ºC
Net weight BBQ JOBA SM	14 Kg
Net weight BBQ JOBA	23 Kg

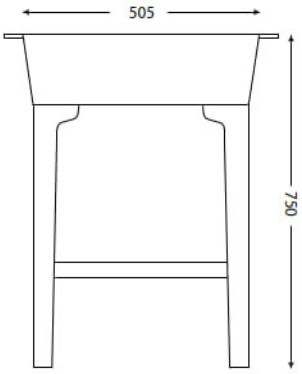

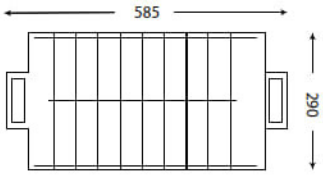

INCLUDED ACCESSORIES
DESCRIPTION
Meat Tongs
Rodgrill
Cool hand

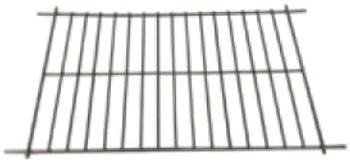

RODGRILL

COOL HAND

MEAT TONGS

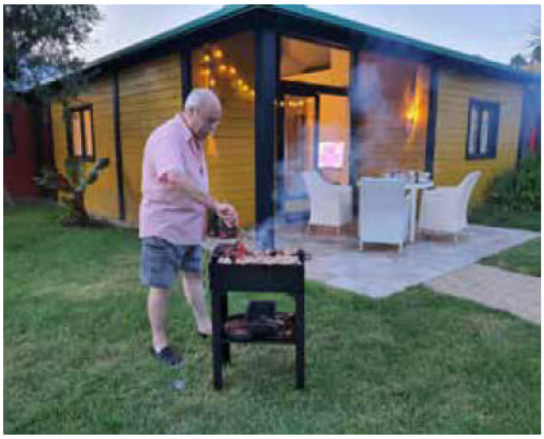

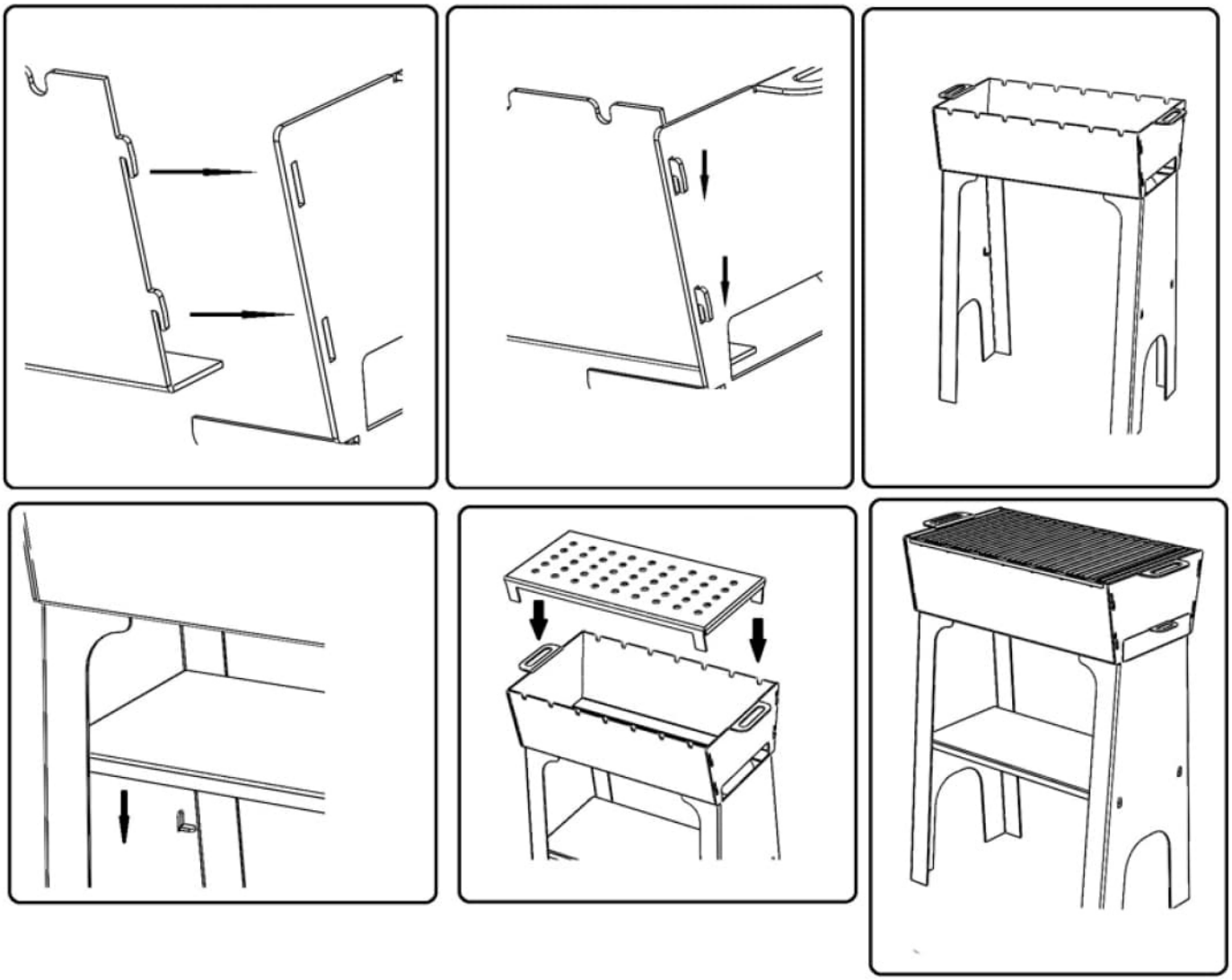

THE CHARCOAL OVENS COMPANY

PT MULTI FLASHINDO KARISMA

Jakarta
Jl. Hayam wuruk 114 Blok A No. 4
Jakarta - Indonesia 11160
Telp: +6221 626 8758
Whatsapp: +62811 9144 617
Fax: +6221 625 8473

Surabaya :
Jl Raya Sarono jiwo no 4, Prapen
Kec. Tenggilis Mejoyo Surabaya 60299
Telp: +6231 847 1460
Whatsapp: +62811 9611 2726
Fax: +6231 847 1474

Service Center :
Jl. Kamal Raya No.9 RT01/06, Tegal Alur - Cengkareng
Telp: +6221 5595 2523 / 2952 8135
Whatsapp: +62811 9144 614
Fax: +6221 5595 7271
Email: service.center@mfk.co.id

sales.dept@mfk.co.id | mfk pt | MFK Channel | mfk_pt | MFK PT | MFK_PT | MFK_PT | MFK PT